Tables of Loads and Dimensions

PRECISION BALLSCREWS

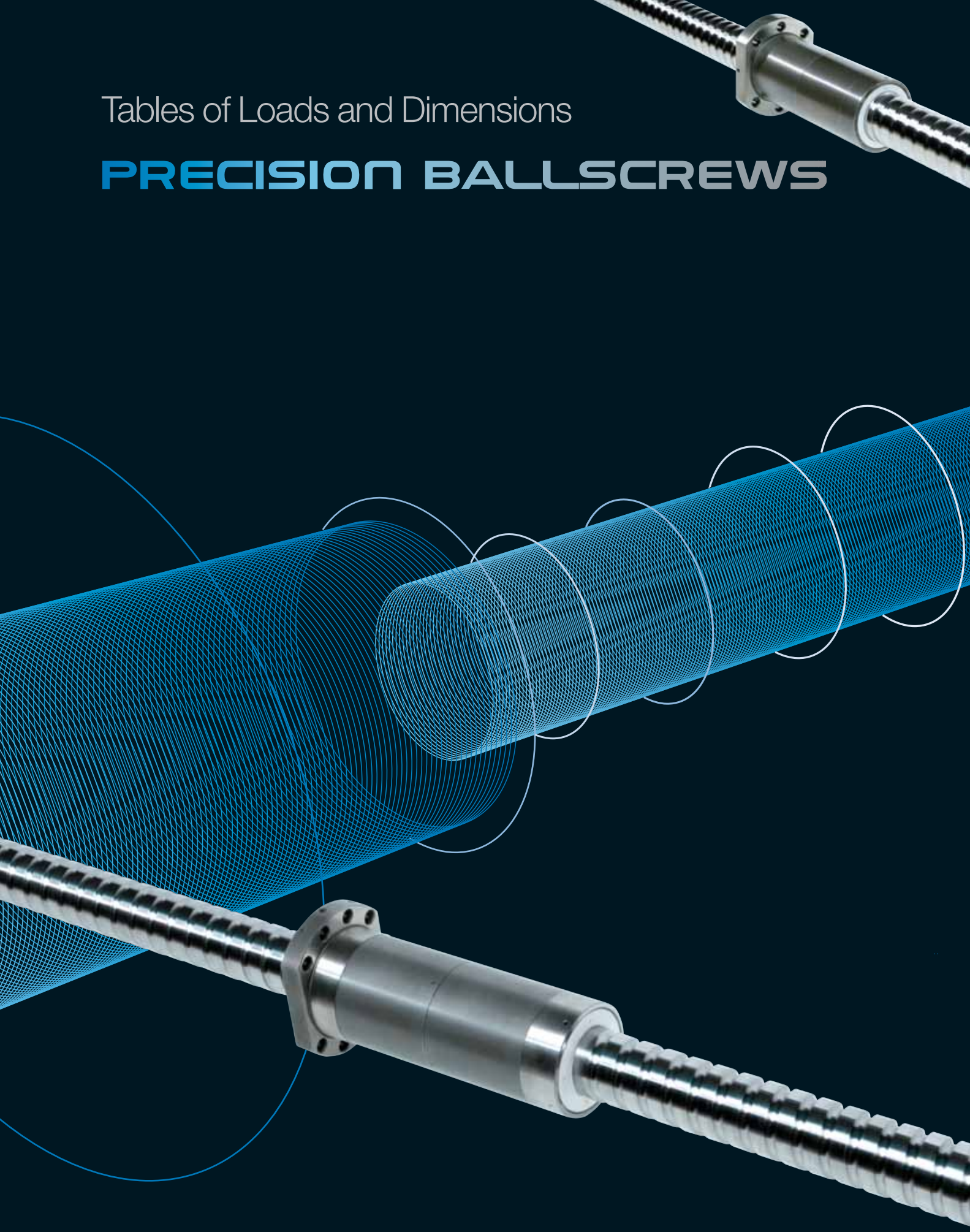

SHUTON COMPLEX®

SHUTON

SHUTON

TABLES OF LOADS AND DIMENSIONS

PRELOADED COMPACT NUT - Steel Balls
PRELOADED DOUBLE NUT - Steel Balls
PRELOADED DOUBLE NUT - Ceramic Balls
SINGLE NUT, WITH LOW PRELOAD and WITHOUT PLAY - Steel Balls

SHUTON has verified the accuracy of all the data contained in this catalogue. However, it does not accept liability for any possible incorrect or incomplete data.

Due to the constant development of products, SHUTON reserves the right to modify any information or data in this catalogue without notice.

Publisher:
SHUTON, S.A.
Polígono Industrial Goiain
01170 Legutiano (Álava)
http://www.shuton.com
e-mail: shuton@shuton.com

January 2009
Printed in Spain

All rights reserved.
Reproduction in full or in part, without SHUTON authorisation, is prohibited.

CONTENTS

Tying of the nut to the table, and dimensions of cylindrical nut key..... 4
Meaning of the reference number..... 5
Preloaded COMPACT nut, with internal recirculation and steel balls..... 6
Preloaded DOUBLE nut, with steel balls..... 16
Preloaded DOUBLE nut, with ceramic balls..... 42
SINGLE nut, with low preload and without play, steel balls..... 48
Summary table of static and dynamic load capacities..... 62
Summary table of nut rigidities..... 64
Required information for ordering a ballscrew..... 66
SHUTON location and contacts..... 67

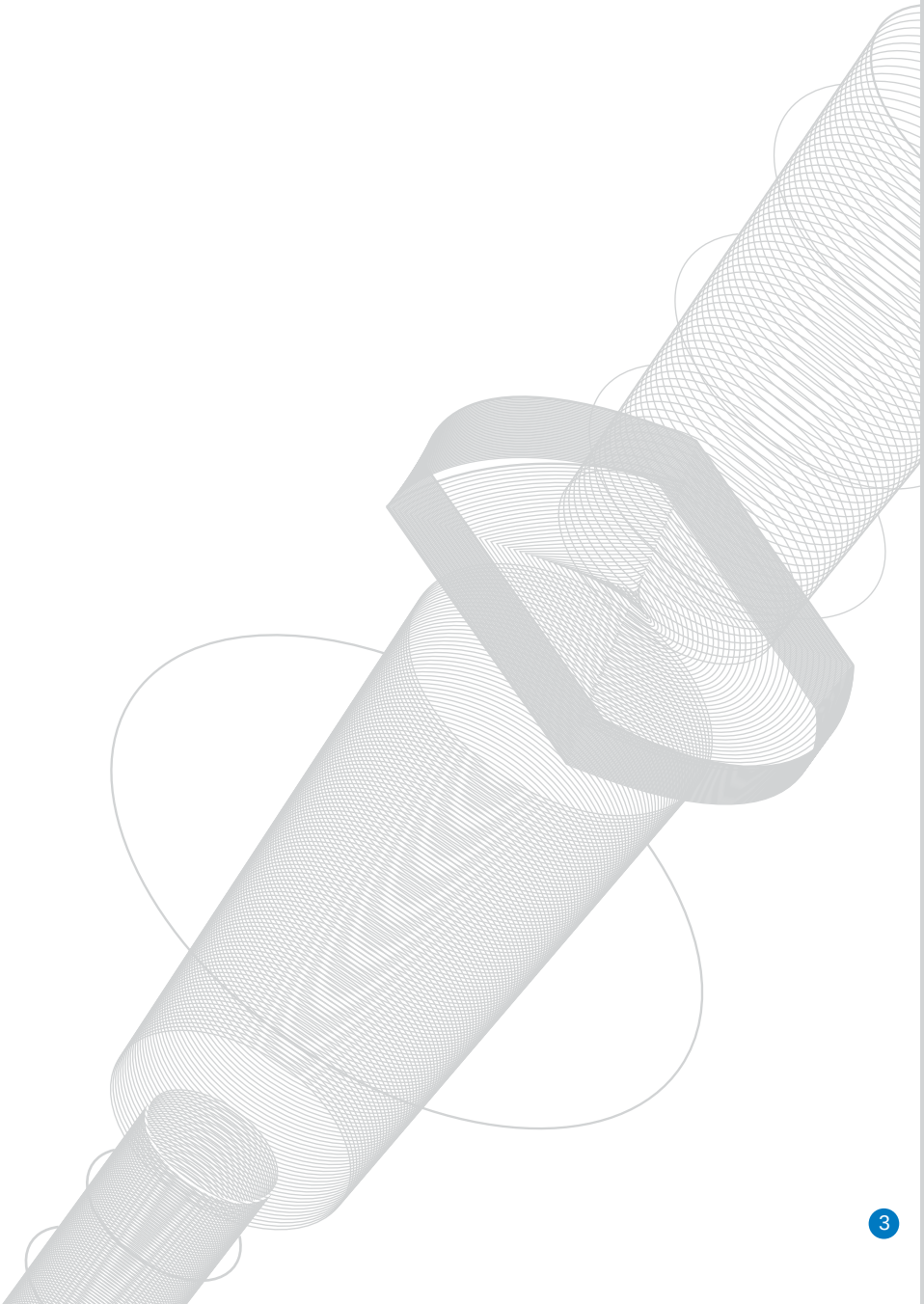

TYING OF THE NUT TO THE TABLE

In most of the cases, the ballscrews are tied to the table by a lateral flange.

This flange can be according the customer drawing, though is advised to chose one of the three standard designs defined by standards DIN69051 and ISO3408:

do ≦ 32

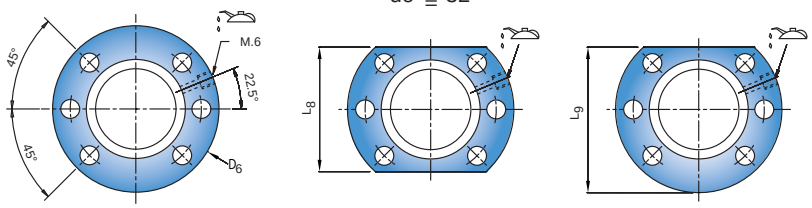

A B C

do ≧ 40

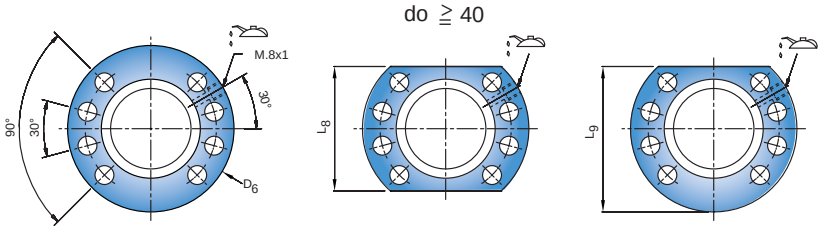

A B C

When possible is advised to choose the shape A, most of all if it is an assembly of rotary nut, to make the nut be equilibrated.

When is not possible to eliminate all the radial forces in the nut, SHUTON advises to use flanged centre nuts.

Sometimes there is not other possibility than using cylindrical nut and tie to the table with a key.

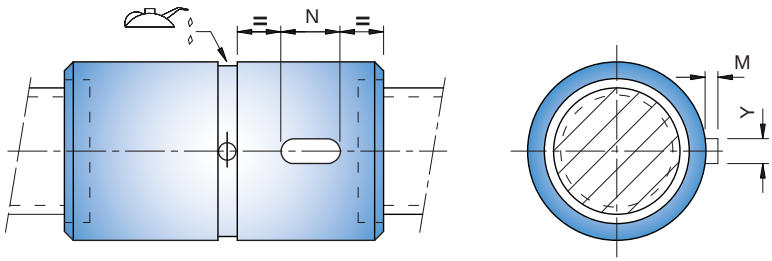

The standard dimensions of this key are in function of the nominal diameter of the ballscrew and the dynamic load according to the next tables:

d_0	Y (h9)	M
20-25	6	2
32-40	8	3
50-63	10	4
80-100	12	4

C_a	N
< 25000	15
< 50000	20
< 100000	30
< 150000	40
≥ 150000	50

MEANING OF THE REFERENCE NUMBER

TD B _ -U 50 - 25 - 8 - 4

4 Number of circuits with load-supporting balls `i´

8 Abbreviation of the diameter of the balls `Dw´

D_W	3,175	3,969	4,762	6,35	7,938	9,525	12,7
Abbreviation	3	4	5	6	8	9	12

25 Lead of the ballscrew `Ph´

50 Nominal diameter of the ballscrew `do´

-U Recirculation of the balls:

- -S: *internal recirculation **
- -U: *external recirculation ***

Ball material:

- : *steel*
- -CER: *ceramic*

B Flanged or cylindrical nut:

- B: *flanged nut*
- BC: *nut with centred flange*
- L: *cylindrical nut*

TD Type of nut:

- TC: *compact nut*
- TD: *double nut*
- TS: *single nut*

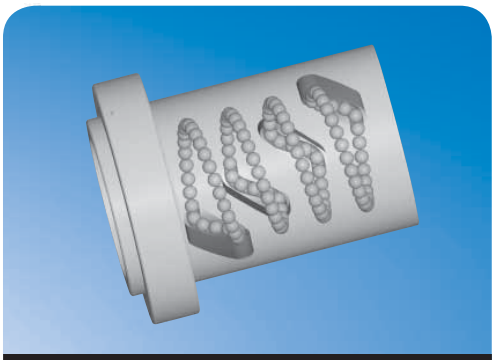

* Internal Recirculation “S”

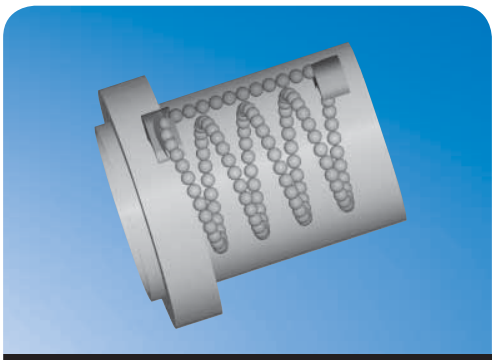

** External Recirculation “U”

PRELOADED COMPACT NUT

Steel Balls

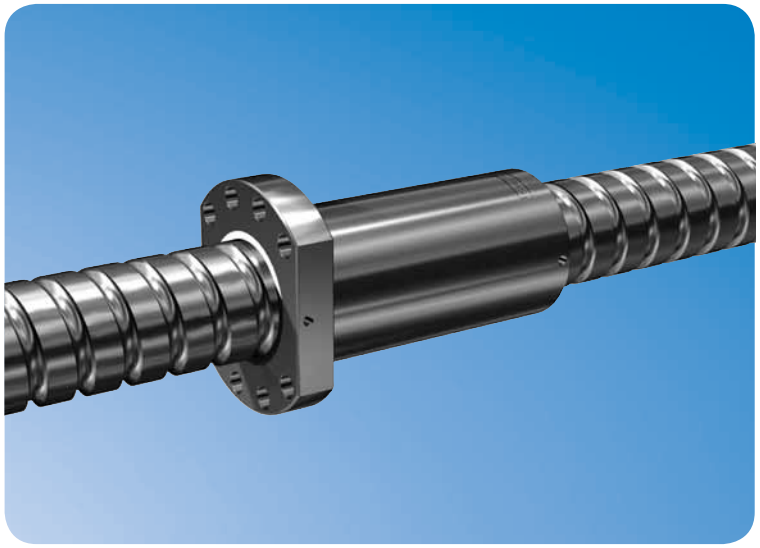

Preloading is achieved by modifying the thread pitch in a single intermediate thread of the nut, using the CNC grinding process.
So, the nut of these high-precision ballscrews is made up of a single part.

SHUTON high-precision ballscrews, with preloaded compact nut, have multiple advantages:

· Better alignment and concentricity of the complete nut with the ballscrew.
· Reduction of the length of the nut, with less mass.

· Elimination of bearing-support parts in the designs of rotary nuts.
· Possibility of special designs with compact nut-bearing bodies.

The compact nut can be assembled with internal recirculation ‘S’ only.
It is the common recirculation for short leads.
Each circuit is independent and has it own deflector in ‘S’ shape.

SHUTON advises the compact nut for small ballscrews with short and middle lead.

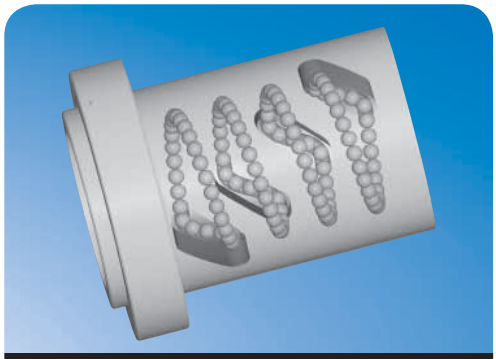

Internal Recirculation ‘S’

Nominal diameter & Lead,
with the maximum number of circuits made at SHUTON
of Standard Preloaded Compact Nut

d_0 \ P_h	5	6	10	12	15	16	20
20	3 + 3						
25	4 + 4						
32	5 + 5		3 + 3				
40	6 + 6	6 + 6	4 + 4	3 + 3		2 + 2	2 + 2
50	6 + 6	6 + 6	6 + 6	4 + 4	3 + 3		
63	6 + 6		6 + 6	5 + 5			
80			6 + 6				
100			6 + 6				

If especial cases out of range are required, consult with SHUTON

PRELOADED COMPACT NUT

Steel Balls

TCB : Compact Flanged Nut

TCL : Compact Cylindrical Nut

Code TCB-S TCL-S	Nominal diameter d_0	Lead P_h	Ball diameter D_w	Root diameter d_2	Circuits i	Dynamic load * C_a [N]	Static load * C_{oa} [N]	Rigidity of ball contact zone ** $R_{b/t,pr}$ [N/µm]	Rigidity of nut *** R_{nu} [N/µm]
TCx-S 2005-3-2	20	5	3,175	17,8	2 + 2	8800	13400	460	430
TCx-S 2005-3-3					3 + 3	12000	20400	680	650
TCx-S 2505-3-2	25	5	3,175	22,8	2 + 2	10000	17500	570	530
TCx-S 2505-3-3					3 + 3	13600	26700	850	790
TCx-S 2505-3-4					4 + 4	17300	36200	1150	1070
TCx-S 3205-3-2	32	5	3,175	29,8	2 + 2	11300	23400	720	660
TCx-S 3205-3-3					3 + 3	15500	35600	1080	990
TCx-S 3205-3-4					4 + 4	19700	48200	1450	1330
TCx-S 3205-3-5					5 + 5	23900	61100	1840	1690
TCx-S 3210-6-2		10	6,35	26,5	2 + 2	28900	42500	830	790
TCx-S 3210-6-3					3 + 3	39000	63800	1200	1150

* Ca and Coa : Modified static and dynamic load capacities, calculated according to DIN 69051/4 standard and ISO3408/5. See 'Technical Description' pages 11-16.
** Rb/t,pr : Rigidity of the balls contact zone for a preload force 10% of Ca. See 'Technical Description' page 22. For a different preload force, multiply by $\sqrt[3]{F_{pr}/0,1\,C_a}$
*** Rnu : Total rigidity of the complete nut. It must be multiplied by the factor 'far' which depends on the manufacturing tolerance. See 'Technical Description' page 23.

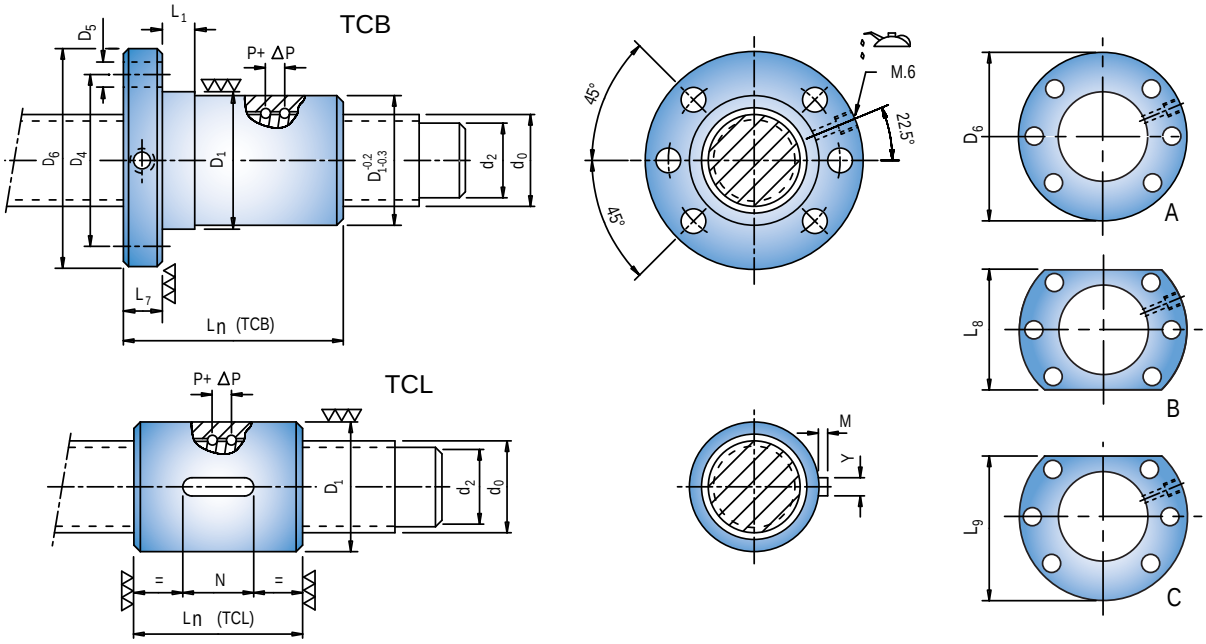

BOLD: DIN 69051/5 dimensions

Length of the nut L_n ±1mm TCB	TCL	D_1 g6	D_4 ± 0,2mm	D_6 h13	D_5 H13	L_7 h13	L_1 + 2mm 0	L_8 h13	L_9 h13	Code TCB-S TCL-S
57	52	**36**	**47**	**58**	**6,6**	12	**10**	**44**	**51**	TCx-S 2005-3-2
68	62									TCx-S 2005-3-3
57	52	**40**	**51**	**62**	**6,6**	12	**10**	**48**	**55**	TCx-S 2505-3-2
68	62									TCx-S 2505-3-3
79	73									TCx-S 2505-3-4
57	52	**50**	**65**	**80**	**9**	**12**	**10**	**62**	**71**	TCx-S 3205-3-2
68	62									TCx-S 3205-3-3
79	73									TCx-S 3205-3-4
89	83									TCx-S 3205-3-5
97	95					14	16			TCx-S 3210-6-2
112	112									TCx-S 3210-6-3

Key dimensions of the cylindrical nut: N, M, Y are obtained in the tables of page 4 of the catalogue.
It is advised to use the dimensions of the tables, although it is possible to manufacture ballscrew with other dimensions. Consult with SHUTON.
Smaller nut diameters than indicated in the tables can reduce the rigidity of the assembly between 5 and 10%.

PRELOADED COMPACT NUT

Steel Balls

TCB : Compact Flanged Nut

TCL : Compact Cylindrical Nut

Code TCB-S TCL-S	Nominal diameter d_0	Lead P_h	Ball diameter D_w	Root diameter d_2	Circuits i	Dynamic load * C_a [N]	Static load * C_{oa} [N]	Rigidity of ball contact zone ** $R_{b/t,pr}$ [N/µm]	Rigidity of nut *** R_{nu} [N/µm]
TCx-S 4005-3-2	40	5	3,175	37,8	2 + 2	12600	30000	890	790
TCx-S 4005-3-3					3 + 3	17200	45700	1320	1190
TCx-S 4005-3-4					4 + 4	21900	61900	1780	1610
TCx-S 4005-3-5					5 + 5	26500	78500	2250	2050
TCx-S 4005-3-6					6 + 6	31200	95500	2750	2510
TCx-S 4006-4-2		6	3,969	37,2	2 + 2	17800	38600	920	830
TCx-S 4006-4-3					3 + 3	24200	58800	1370	1240
TCx-S 4006-4-4					4 + 4	30800	79500	1840	1680
TCx-S 4006-4-5					5 + 5	37400	100700	2330	2130
TCx-S 4006-4-6					6 + 6	44000	122400	2840	2610
TCx-S 4010-6-2		10	6,35	34,5 (35,6)	2 + 2	33800	56500	1060	1000
TCx-S 4010-6-3					3 + 3	45700	84800	1540	1450
TCx-S 4010-6-4					4 + 4	57700	113000	2010	1910
TCx-S 4012-6-2		12		35,6	2 + 2	30100	51900	810	760
TCx-S 4012-6-3					3 + 3	40900	78700	1200	1130
TCx-S 4016-6-2		16			2 + 2	28600	48100	710	670
TCx-S 4020-6-2		20			2 + 2	29500	50700	740	710

* Ca and Coa : Modified static and dynamic load capacities, calculated according to DIN 69051/4 standard and ISO3408/5. See 'Technical Description' pages 11-16.
** Rb/t,pr : Rigidity of the balls contact zone for a preload force 10% of Ca. See 'Technical Description' page 22. For a different preload force, multiply by $\sqrt[3]{F_{pr}/0{,}1\,C_a}$
*** Rnu : Total rigidity of the complete nut. It must be multiplied by the factor 'far' which depends on the manufacturing tolerance. See 'Technical Description' page 23.

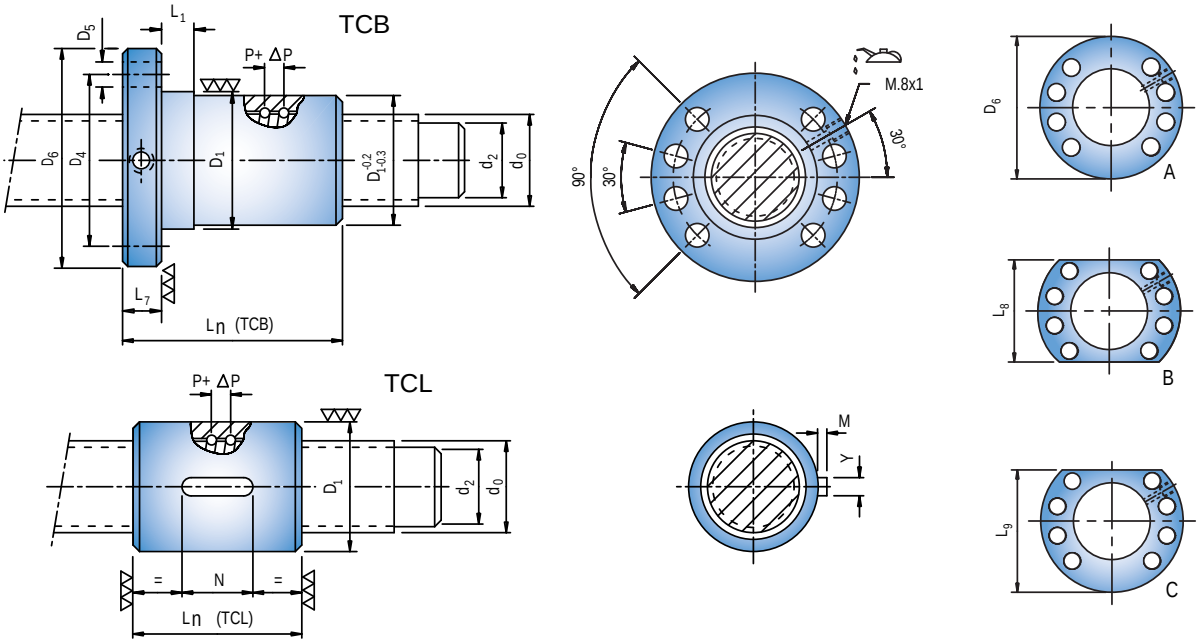

BOLD: DIN 69051/5 dimensions

Length of the nut L_n ±1mm TCB	TCL	D_1 g6	D_4 ± 0,2mm	D_6 h13	D_5 H13	L_7 h13	L_1 + 2mm 0	L_8 h13	L_9 h13	Code TCB-S TCL-S
59	52									TCx-S 4005-3-2
70	62									TCx-S 4005-3-3
81	73									TCx-S 4005-3-4
91	83									TCx-S 4005-3-5
103	94					**14**	**10**			TCx-S 4005-3-6
65	59									TCx-S 4006-4-2
80	71									TCx-S 4006-4-3
89	83									TCx-S 4006-4-4
105	96	**63**	**78**	**93**	**9**			**70**	**81,5**	TCx-S 4006-4-5
118	109									TCx-S 4006-4-6
101	96									TCx-S 4010-6-2
123	117						16			TCx-S 4010-6-3
138	138									TCx-S 4010-6-4
114	104					18				TCx-S 4012-6-2
138	129						**20**			TCx-S 4012-6-3
122	109									TCx-S 4016-6-2
135	130									TCx-S 4020-6-2

Key dimensions of the cylindrical nut: N, M, Y are obtained in the tables of page 4 of the catalogue.
It is advised to use the dimensions of the tables, although it is possible to manufacture ballscrew with other dimensions. Consult with SHUTON.
Smaller nut diameters than indicated in the tables can reduce the rigidity of the assembly between 5 and 10%.

PRELOADED COMPACT NUT

Steel Balls

TCB : Compact Flanged Nut

TCL : Compact Cylindrical Nut

Code TCB-S TCL-S	Nominal diameter d_0	Lead P_h	Ball diameter D_w	Root diameter d_2	Circuits i	Dynamic load * C_a [N]	Static load * C_{oa} [N]	Rigidity of ball contact zone ** $R_{b/t,pr}$ [N/µm]	Rigidity of nut *** R_{nu} [N/µm]
TCx-S 5005-3-2	50	5	3,175	47,8	2 + 2	13900	38400	1080	940
TCx-S 5005-3-3					3 + 3	19000	58400	1610	1410
TCx-S 5005-3-4					4 + 4	24200	79100	2170	1910
TCx-S 5005-3-5					5 + 5	29300	100300	2740	2430
TCx-S 5005-3-6					6 + 6	34400	122000	3340	2980
TCx-S 5006-4-2		6	3,969	47,2	2 + 2	19800	49600	1130	990
TCx-S 5006-4-3					3 + 3	26900	75500	1680	1480
TCx-S 5006-4-4					4 + 4	34300	102100	2260	2000
TCx-S 5006-4-5					5 + 5	41600	129400	2860	2550
TCx-S 5006-4-6					6 + 6	48900	157300	3480	3120
TCx-S 5010-6-2		10	6,35	44,5	2 + 2	38900	74100	1340	1240
TCx-S 5010-6-3					3 + 3	52600	111100	1940	1800
TCx-S 5010-6-4					4 + 4	66400	148200	2540	2360
TCx-S 5010-6-5					5 + 5	80000	185200	3130	2910
TCx-S 5010-6-6					6 + 6	93400	222200	3720	3470
TCx-S 5012-8-2		12	7,938	44,6	2 + 2	46300	83900	1020	930
TCx-S 5012-8-3					3 + 3	62900	127000	1500	1380
TCx-S 5012-8-4					4 + 4	79900	170700	1990	1840
TCx-S 5015-8-2		15			2 + 2	46200	83800	1020	950
TCx-S 5015-8-3					3 + 3	62800	126800	1490	1400

* Ca and Coa : Modified static and dynamic load capacities, calculated according to DIN 69051/4 standard and ISO3408/5. See 'Technical Description' pages 11-16.
** Rb/t,pr : Rigidity of the balls contact zone for a preload force 10% of Ca. See 'Technical Description' page 22. For a different preload force, multiply by $\sqrt[3]{F_{pr}/0,1\,C_a}$
*** Rnu : Total rigidity of the complete nut. It must be multiplied by the factor 'far' which depends on the manufacturing tolerance. See 'Technical Description' page 23.

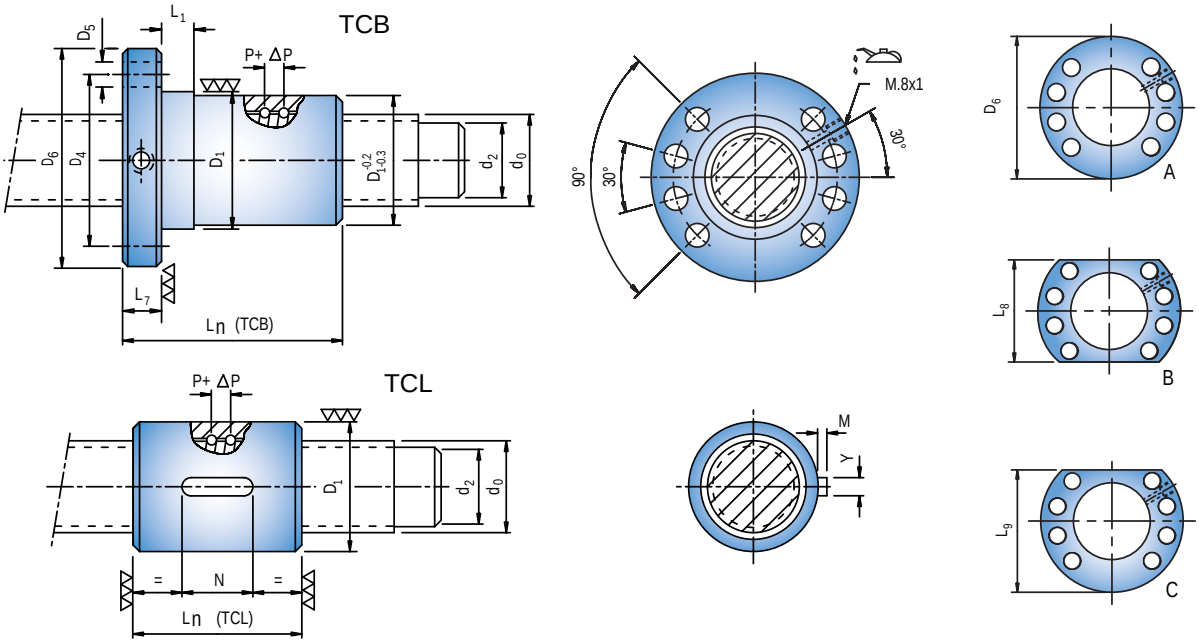

BOLD: DIN 69051/5 dimensions

Length of the nut L_n ±1mm TCB	TCL	D_1 g6	D_4 ± 0,2mm	D_6 h13	D_5 H13	L_7 h13	L_1 + 2mm 0	L_8 h13	L_9 h13	Code TCB-S TCL-S
63	52									TCx-S 5005-3-2
75	62									TCx-S 5005-3-3
83	73									TCx-S 5005-3-4
96	83									TCx-S 5005-3-5
107	94									TCx-S 5005-3-6
69	59						**10**			TCx-S 5006-4-2
84	71									TCx-S 5006-4-3
94	84									TCx-S 5006-4-4
109	96									TCx-S 5006-4-5
122	109	**75**	**93**	**110**	**11**	18		**85**	**97,5**	TCx-S 5006-4-6
101	96									TCx-S 5010-6-2
123	117									TCx-S 5010-6-3
138	138						16			TCx-S 5010-6-4
163	158									TCx-S 5010-6-5
185	180									TCx-S 5010-6-6
116	113									TCx-S 5012-8-2
146	138									TCx-S 5012-8-3
165	162						**20**			TCx-S 5012-8-4
121	115									TCx-S 5015-8-2
159	161									TCx-S 5015-8-3

Key dimensions of the cylindrical nut: N, M, Y are obtained in the tables of page 4 of the catalogue.
It is advised to use the dimensions of the tables, although it is possible to manufacture ballscrew with other dimensions. Consult with SHUTON.
Smaller nut diameters than indicated in the tables can reduce the rigidity of the assembly between 5 and 10%.

PRELOADED COMPACT NUT

Steel Balls

TCB : Compact Flanged Nut

TCL : Compact Cylindrical Nut

Code TCB-S TCL-S	Nominal diameter d_0	Lead P_h	Ball diameter D_w	Root diameter d_2	Circuits i	Dynamic load * C_a [N]	Static load * C_{oa} [N]	Rigidity of ball contact zone ** $R_{b/t,pr}$ [N/µm]	Rigidity of nut *** R_{nu} [N/µm]
TCx-S 6305-3-2	63	5	3,175	60,8	2 + 2	15400	49200	1320	1100
TCx-S 6305-3-3					3 + 3	21000	74900	1970	1650
TCx-S 6305-3-4					4 + 4	26700	101400	2650	2240
TCx-S 6305-3-5					5 + 5	32400	128600	3350	2860
TCx-S 6305-3-6					6 + 6	38000	156400	4080	3510
TCx-S 6310-6-2		10	6,35	57,5	2 + 2	43800	95300	1650	1490
TCx-S 6310-6-3					3 + 3	59200	142900	2380	2160
TCx-S 6310-6-4					4 + 4	74800	190500	3120	2840
TCx-S 6310-6-5					5 + 5	90100	238100	3860	3510
TCx-S 6310-6-6					6 + 6	105200	285800	4590	4180
TCx-S 6312-8-2		12	7,938	57,6	2 + 2	54300	115100	1330	1200
TCx-S 6312-8-3					3 + 3	73600	174000	1960	1770
TCx-S 6312-8-4					4 + 4	93500	233900	2600	2360
TCx-S 6312-8-5					5 + 5	113200	294800	3260	2970
TCx-S 8010-6-2	80	10	6,35	74,5	2 + 2	50200	126900	2090	1790
TCx-S 8010-6-3					3 + 3	67800	190400	3030	2610
TCx-S 8010-6-4					4 + 4	85600	253800	3960	3420
TCx-S 8010-6-5					5 + 5	103200	317300	4890	4230
TCx-S 8010-6-6					6 + 6	120400	380700	5820	5040
TCx-S 10010-6-2	100	10	6,35	94,5	2 + 2	55100	158700	2500	2030
TCx-S 10010-6-3					3 + 3	74400	238100	3620	2960
TCx-S 10010-6-4					4 + 4	94000	317400	4740	3890
TCx-S 10010-6-5					5 + 5	113300	396800	5860	4810
TCx-S 10010-6-6					6 + 6	132200	476200	6970	5730

* Ca and Coa : Modified static and dynamic load capacities, calculated according to DIN 69051/4 standard and ISO3408/5. See 'Technical Description' pages 11-16.
** Rb/t,pr : Rigidity of the balls contact zone for a preload force 10% of Ca. See 'Technical Description' page 22. For a different preload force, multiply by $\sqrt[3]{F_{pr}/0,1\,C_a}$
*** Rnu : Total rigidity of the complete nut. It must be multiplied by the factor 'far' which depends on the manufacturing tolerance. See 'Technical Description' page 23.

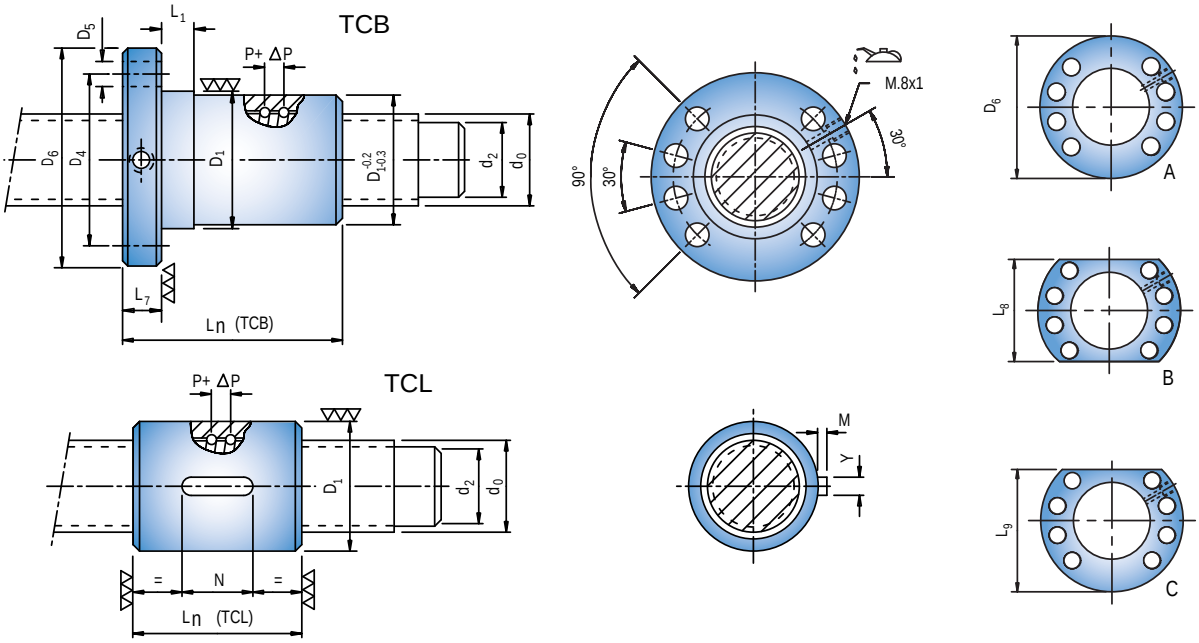

BOLD: DIN 69051/5 dimensions

Length of the nut L_n ±1mm TCB	TCL	D_1 g6	D_4 ± 0,2mm	D_6 h13	D_5 H13	L_7 h13	L_1 + 2mm 0	L_8 h13	L_9 h13	Code TCB-S TCL-S
63	52									TCx-S 6305-3-2
75	63									TCx-S 6305-3-3
83	73					**18**				TCx-S 6305-3-4
96	83									TCx-S 6305-3-5
107	94	**90**	**108**	**125**	**11**		16	**95**	**110**	TCx-S 6305-3-6
105	97									TCx-S 6310-6-2
127	117									TCx-S 6310-6-3
142	138									TCx-S 6310-6-4
167	158									TCx-S 6310-6-5
189	180					22				TCx-S 6310-6-6
120	113									TCx-S 6312-8-2
150	138	**95**	**115**	**135**	**13,5**		**25**	**100**	**117,5**	TCx-S 6312-8-3
169	162	(90)	(108)	(125)	(11)			(95)	(110)	TCx-S 6312-8-4
200	187									TCx-S 6312-8-5
105	97									TCx-S 8010-6-2
127	118									TCx-S 8010-6-3
142	138	**105**	**125**	**145**	**13,5**	22	16	**110**	**127,5**	TCx-S 8010-6-4
167	158									TCx-S 8010-6-5
189	180									TCx-S 8010-6-6
101	97									TCx-S 10010-6-2
126	118									TCx-S 10010-6-3
142	138	**125**	**145**	**165**	**13,5**	**22**	16	**130**	**147,5**	TCx-S 10010-6-4
167	158									TCx-S 10010-6-5
189	180									TCx-S 10010-6-6

Key dimensions of the cylindrical nut: N, M, Y are obtained in the tables of page 4 of the catalogue.
The use of dimensions of the tables is advised. In brackets () the second option. It is possible to manufacture the nuts with different dimensioning. Consult with SHUTON.
Smaller nut diameters than the first option of the table can reduce the rigidity of the assembly between 5 and 10%.

PRELOADED DOUBLE NUT

Steel Balls

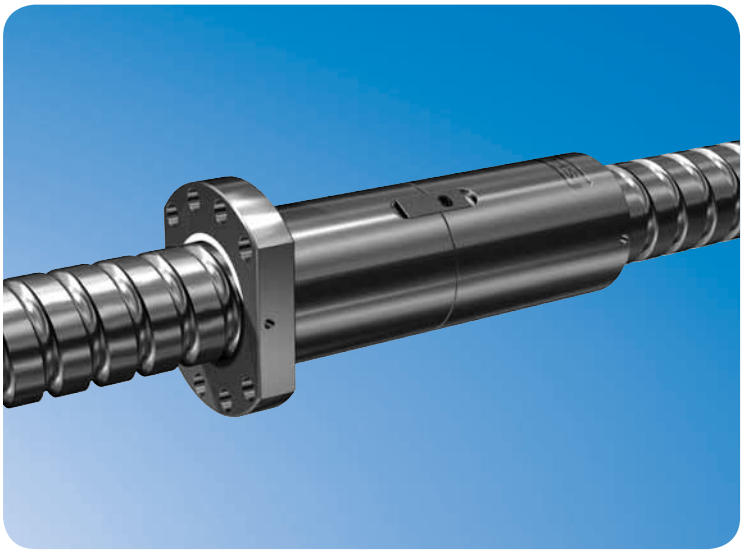

The nut of these high-precision ballscrews is formed by two parts separated by a washer whose thickness determines the preload force.

At SHUTON these two parts are embedded, with a view to eliminating possible radial displacement and improving the alignment and concentricity of both parts.

The maintenance is very fast, because it is not necessary to disassemble the ballscrew from the machine, it is enough with disassembling the nut and replacing the washer for readjusting the preload.

SHUTON high-precision ballscrews, with external recirculation 'U', have multiple advantages:

· Increase of the dynamic load, the static load and the axial rigidity.
· Shorter nut length.
· Considerable reduction of the generated temperature and noise.
· Smoother movement.

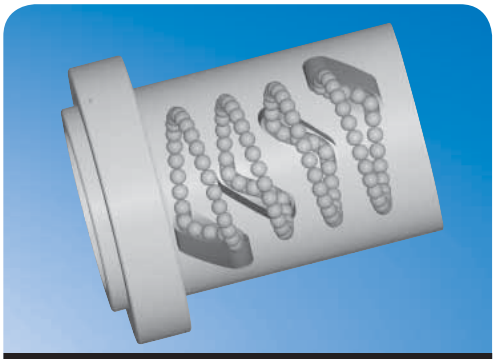

Internal Recirculation ‘S’

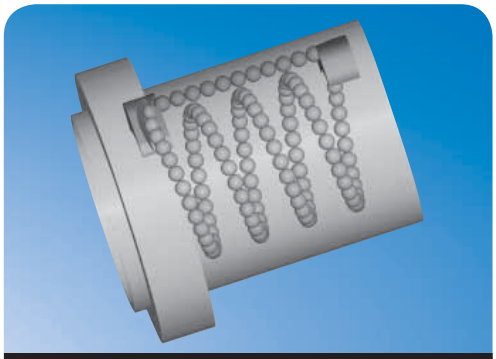

External Recirculation ‘U’

Nominal diameter & Lead, with the maximum number of circuits made at SHUTON of Standard Preloaded Double Nut

Internal Recirculation 'S' External Recirculation 'U'

d_0 \ P_h	5	6	10	12	15	16	20	25	30	40	50
20	5 (2)										
25	5 (2)		4 (2)				2 (2)				
32	5 (2)		5 (2)				3 (2)	2 (2)			
40	6 (2)	6 (2)	5 (2)	5 (2)	5 (2)	5 (2)	4 (2)	3 (2)	3 (2)	2 (2)	
50	6 (2)	6 (2)	6 (2)	5 (2)	5 (2)	5 (2)	5 (2)	4 (2)	3 (2)	3 (2)	2 (2)
63	6 (2)		6 (2)	6 (2)	6 (2)	6 (2)	6 (2)	5 (2)	4 (2)	3 (2)	3 (2)
80			6 (2)	6 (2)	6 (2)	6 (2)	6 (2)	6 (2)	5 (2)	4 (2)	3 (2)
100			6 (2)	6 (2)	6 (2)	6 (2)	6 (2)	6 (2)	5 (2)	4 (2)	3 (2)

If especial cases out of range are required, consult with SHUTON

PRELOADED DOUBLE NUT

Steel Balls

TDB : Double Flanged

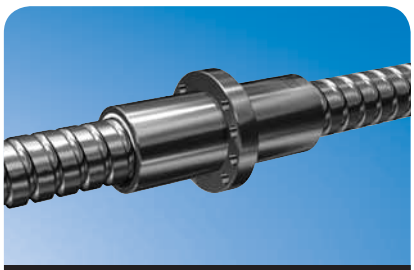

TDBC : Double Flanged Centre

TDL : Double Cylindrical

Code TDB TDBC TDL	Nominal diameter d_0	Lead P_h	Ball diameter D_w	Root diameter d_2	Circuits i	Dynamic load * C_a [N]	Static load * C_{oa} [N]	Rigidity of ball contact zone ** $R_{b/t,pr}$ [N/µm]	Rigidity of nut *** R_{nu} [N/µm]
TDx-S 2005-3-2	20	5	3,175	17,8	2 (2)	8800	13400	460	430
TDx-S 2005-3-3					3 (2)	12000	20400	680	650
TDx-S 2005-3-4					4 (2)	15300	27600	920	870
TDx-S 2005-3-5					5 (2)	18500	35100	1160	1110
TDx-S 2505-3-2	25	5	3,175	22,8	2 (2)	10000	17500	570	530
TDx-S 2505-3-3					3 (2)	13600	26700	850	790
TDx-S 2505-3-4					4 (2)	17300	36200	1150	1070
TDx-S 2505-3-5					5 (2)	21000	45900	1450	1360
TDx-S 2510-5-2		10	4,762	21,7	2 (2)	16000	23300	470	450
TDx-S 2510-5-3					3 (2)	21700	34900	690	650
TDx-S 2510-5-4					4 (2)	27400	46500	900	850
TDx-U 2520-5-2		20			2 (2)	16400	24400	480	470
TDx-S 3205-3-2	32	5	3,175	29,8	2 (2)	11300	23400	720	660
TDx-S 3205-3-3					3 (2)	15500	35600	1080	990
TDx-S 3205-3-4					4 (2)	19700	48200	1450	1330
TDx-S 3205-3-5					5 (2)	23900	61100	1840	1690
TDx-S 3210-6-2		10	6,35	26,5	2 (2)	28900	42500	830	790
TDx-S 3210-6-3					3 (2)	39000	63800	1200	1150
TDx-S 3210-6-4					4 (2)	49300	85000	1570	1500
TDx-S 3210-6-5					5 (2)	59400	106300	1940	1850
TDx-U 3220-5-2		20	4,762	28,7	2 (2)	19000	32600	610	590
TDx-U 3220-5-3					3 (2)	26400	51000	920	890
TDx-U 3225-5-2		25			2 (2)	18800	32300	600	590

* Ca and Coa : Modified static and dynamic load capacities, calculated according to DIN 69051/4 standard and ISO3408/5. See 'Technical Description' pages 11-16.
** Rb/t,pr : Rigidity of the balls contact zone for a preload force 10% of Ca. See 'Technical Description' page 22. For a different preload force, multiply by $\sqrt[3]{F_{pr}/0,1\,C_a}$
*** Rnu : Total rigidity of the complete nut. It must be multiplied by the factor 'far' which depends on the manufacturing tolerance. See 'Technical Description' page 23.

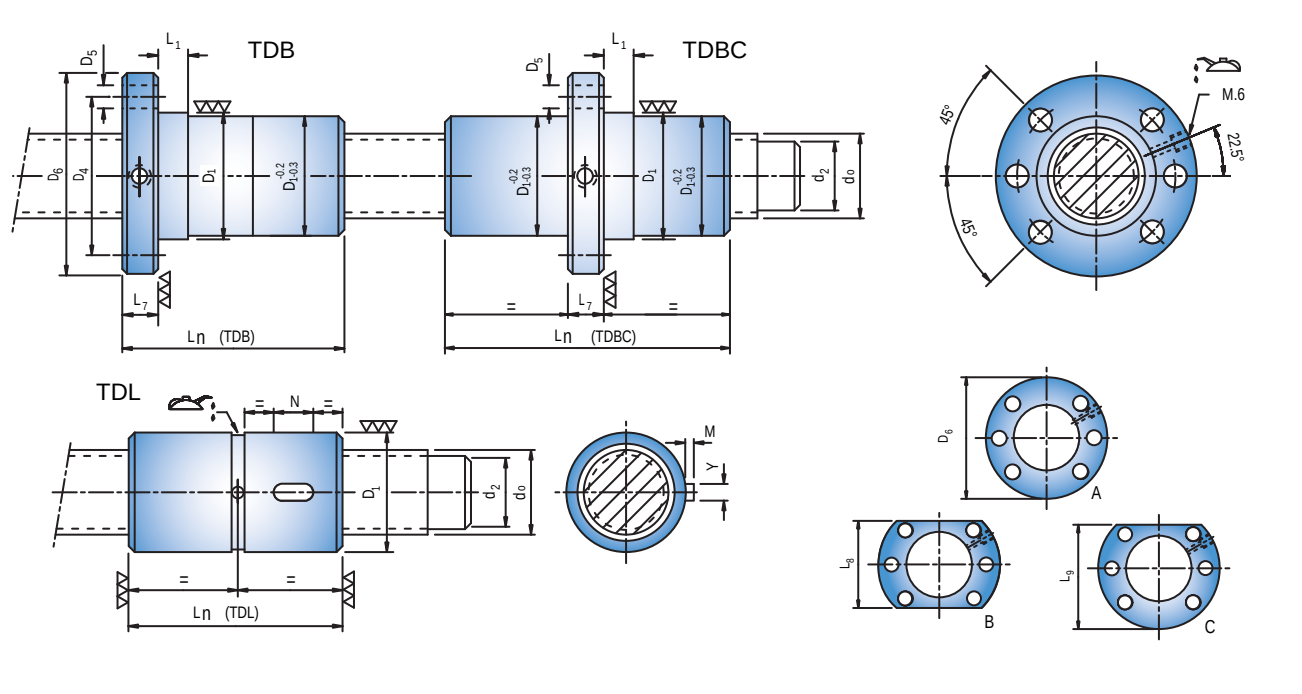

BOLD: DIN 69051/5 dimensions

Length of the nut L_n ±1mm			D_1	D_4	D_6	D_5	L_7 h13		L_1	L_8	L_9	Code TDB TDBC TDL
TDB	TDBC	TDL	g6	± 0,2mm	h13	H13	TDB	TDBC	+ 2mm 0	h13	h13	
71	74	62	**36**	**47**	**58**	**6,6**	**10**	15	**10**	**44**	**51**	TDx-S 2005-3-2
77	85	73										TDx-S 2005-3-3
88	96	84										TDx-S 2005-3-4
99	107	95										TDx-S 2005-3-5
71	74	62	**40**	**51**	**62**	**6,6**	**10**	15	**10**	**48**	**55**	TDx-S 2505-3-2
78	86	74										TDx-S 2505-3-3
88	96	84										TDx-S 2505-3-4
99	107	95										TDx-S 2505-3-5
94	105	92							16			TDx-S 2510-5-2
118	128	115										TDx-S 2510-5-3
141	152	139										TDx-S 2510-5-4
125			50	65	80	9	14	20		62	71	TDx-U 2520-5-2
73	74	67	**50**	**65**	**80**	**9**	**12**	15	**10**	**62**	**71**	TDx-S 3205-3-2
86	86	79										TDx-S 3205-3-3
96	96	90										TDx-S 3205-3-4
107	107	100										TDx-S 3205-3-5
117	127	115					14	20	16			TDx-S 3210-6-2
137	150	138										TDx-S 3210-6-3
157	172	160										TDx-S 3210-6-4
185	193	181										TDx-S 3210-6-5
129			**56**	**71**	**86**		**14**		**20**	**65**	**75,5**	TDx-U 3220-5-2
169												TDx-U 3220-5-3
145												TDx-U 3225-5-2

Key dimensions of the cylindrical nut: N, M, Y are obtained in the tables of page 4 of the catalogue.
It is advised to use the dimensions of the tables, although it is possible to manufacture ballscrew with other dimensions. Consult with SHUTON.
Smaller nut diameters than indicated in the tables can reduce the rigidity of the assembly between 5 and 10%.

PRELOADED DOUBLE NUT

Steel Balls

TDB : Double Flanged

TDBC : Double Flanged Centre

TDL : Double Cylindrical

Only for old projects and spare parts.
It is advised the 'U' external recirculation
in the pages 22- 23

Code TDB TDBC TDL	Nominal diameter d_0	Lead P_h	Ball diameter D_w	Root diameter d_2	Circuits i	Dynamic load * C_a [N]	Static load * C_{oa} [N]	Rigidity of ball contact zone ** $R_{b/t,pr}$ [N/µm]	Rigidity of nut *** R_{nu} [N/µm]
TDx-S 4005-3-3	40	5	3,175	37,8	3 (2)	17200	45700	1320	1190
TDx-S 4005-3-4					4 (2)	21900	61900	1780	1610
TDx-S 4005-3-5					5 (2)	26500	78500	2250	2050
TDx-S 4005-3-6					6 (2)	31200	95500	2750	2510
TDx-S 4006-4-3		6	3,969	37,2	3 (2)	24200	58800	1370	1240
TDx-S 4006-4-4					4 (2)	30800	79500	1840	1680
TDx-S 4006-4-5					5 (2)	37400	100700	2330	2130
TDx-S 4006-4-6					6 (2)	44000	122400	2840	2610
TDx-U 4010-6-2		10	6,35	34,5	2 (2)	33800	56500	1040	980
TDx-U 4010-6-3					3 (2)	48000	91400	1610	1520
TDx-U 4010-6-4					4 (2)	61600	124700	2140	2020
TDx-U 4010-6-5					5 (2)	74900	157900	2630	2490
TDx-U 4012-6-2		12			2 (2)	33800	56400	1040	990
TDx-U 4012-6-3					3 (2)	48000	91300	1600	1530
TDx-U 4012-6-4					4 (2)	61500	124500	2140	2040
TDx-U 4012-6-5					5 (2)	74800	157700	2630	2500
TDx-S 4016-6-2		16		35,6	2 (2)	28600	48100	710	670
TDx-S 4016-6-3					3 (2)	38600	72200	1020	970
TDx-S 4016-6-4					4 (2)	48700	96200	1340	1280
TDx-S 4016-6-5					5 (2)	58700	120300	1660	1580
TDx-S 4020-6-2		20			2 (2)	29500	50700	740	710
TDx-S 4020-6-3					3 (2)	39900	76100	1070	1030
TDx-S 4020-6-4					4 (2)	50400	101500	1400	1350

* Ca and Coa : Modified static and dynamic load capacities, calculated according to DIN 69051/4 standard and ISO3408/5. See 'Technical Description' pages 11-16.
** Rb/t,pr : Rigidity of the balls contact zone for a preload force 10% of Ca. See 'Technical Description' page 22. For a different preload force, multiply by $\sqrt[3]{F_{pr}/0,1\,C_a}$
*** Rnu : Total rigidity of the complete nut. It must be multiplied by the factor 'far' which depends on the manufacturing tolerance. See 'Technical Description' page 23.

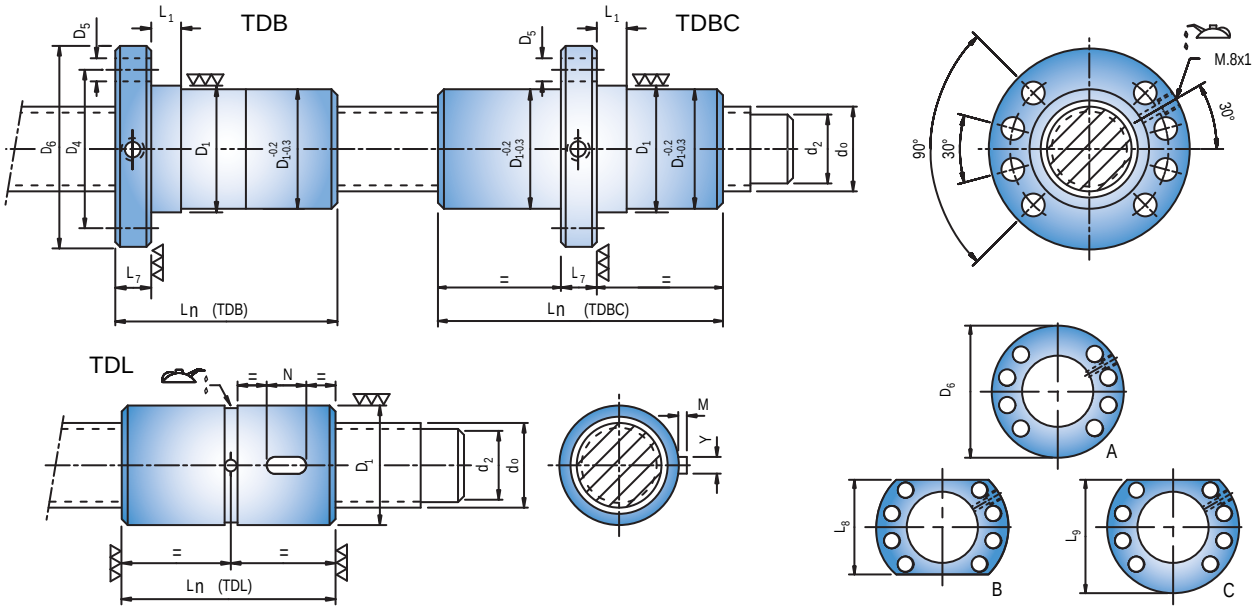

Only for old projects and spare parts.
It is advised the 'U' external recirculation in the pages 22- 23

BOLD: DIN 69051/5 dimensions

Length of the nut L_n ±1mm			D_1	D_4	D_6	D_5	L_7 h13		L_1	L_8	L_9	Code TDB TDBC TDL
TDB	TDBC	TDL	g6	± 0,2mm	h13	H13	TDB	TDBC	+ 2mm 0	h13	h13	
88	86	80										TDx-S 4005-3-3
99	97	91										TDx-S 4005-3-4
109	107	102										TDx-S 4005-3-5
119	117	112						15	**10**			TDx-S 4005-3-6
97	95	89										TDx-S 4006-4-3
110	108	102										TDx-S 4006-4-4
122	121	115										TDx-S 4006-4-5
134	133	127					**14**					TDx-S 4006-4-6
	107											TDx-U 4010-6-2
	127								16			TDx-U 4010-6-3
	147											TDx-U 4010-6-4
	167		**63**	**78**	**93**	**9**				**70**	**81,5**	TDx-U 4010-6-5
	106											TDx-U 4012-6-2
	130											TDx-U 4012-6-3
	154											TDx-U 4012-6-4
	178							20				TDx-U 4012-6-5
145	150	139										TDx-S 4016-6-2
187	188	177					16		**20**			TDx-S 4016-6-3
217	222	211										TDx-S 4016-6-4
251	256	245										TDx-S 4016-6-5
159	162	151										TDx-S 4020-6-2
210	208	197					18					TDx-S 4020-6-3
253	255	244										TDx-S 4020-6-4

Key dimensions of the cylindrical nut: N, M, Y are obtained in the tables of page 4 of the catalogue.
It is advised to use the dimensions of the tables, although it is possible to manufacture ballscrew with other dimensions. Consult with SHUTON.
Smaller nut diameters than indicated in the tables can reduce the rigidity of the assembly between 5 and 10%.

PRELOADED DOUBLE NUT

Steel Balls

TDB : Double Flanged

TDBC : Double Flanged Centre

TDL : Double Cylindrical

Only exceptional cases.
It is advised diameter do:50

Code TDB-U TDBC-U TDL-U	Nominal diameter d_0	Lead P_h	Ball diameter D_w	Root diameter d_2	Circuits i	Dynamic load * C_a [N]	Static load * C_{oa} [N]	Rigidity of ball contact zone ** $R_{b/t,pr}$ [N/µm]	Rigidity of nut *** R_{nu} [N/µm]
TDx-U 4015-6-2	40	15	6,35	34,5	2 (2)	33700	56300	1030	1000
TDx-U 4015-6-3					3 (2)	47800	91100	1590	1540
TDx-U 4015-6-4					4 (2)	61300	124200	2130	2050
TDx-U 4015-6-5					5 (2)	75100	159000	2640	2550
TDx-U 4016-6-2		16			2 (2)	33600	56300	1030	1000
TDx-U 4016-6-3					3 (2)	47700	91000	1590	1540
TDx-U 4016-6-4					4 (2)	61200	124100	2120	2050
TDx-U 4016-6-5					5 (2)	75000	158800	2640	2550
TDx-U 4020-6-2		20			2 (2)	34100	57700	1050	1020
TDx-U 4020-6-3					3 (2)	47500	90600	1580	1530
TDx-U 4020-6-4					4 (2)	61400	125200	2130	2070
TDx-U 4025-6-2		25			2 (2)	33800	57300	1030	1010
TDx-U 4025-6-3					3 (2)	47700	91700	1580	1550
TDx-U 4030-6-2		30			2 (2)	33500	56800	1020	1000
TDx-U 4030-6-3				35,6	3 (2)	41100	80600	1080	1060
TDx-U 4040-6-2		40			2 (2)	28800	50500	690	680
TDx-U 4020-8-2		20	7,938	33,3	2 (2)	45800	72900	1140	1120
TDx-U 4020-8-3					3 (2)	64300	116100	1720	1680
TDx-U 4020-8-4					4 (2)	83800	162000	2340	2280
TDx-U 4025-8-2		25			2 (2)	45400	72400	1130	1110
TDx-U 4025-8-3					3 (2)	64800	118100	1740	1710
TDx-U 4030-8-2		30			2 (2)	44900	71900	1110	1090

* Ca and Coa : Modified static and dynamic load capacities, calculated according to DIN 69051/4 standard and ISO3408/5. See 'Technical Description' pages 11-16.
** Rb/t,pr : Rigidity of the balls contact zone for a preload force 10% of Ca. See 'Technical Description' page 22. For a different preload force, multiply by $\sqrt[3]{F_{pr}/0,1\,C_a}$
*** Rnu : Total rigidity of the complete nut. It must be multiplied by the factor 'far' which depends on the manufacturing tolerance. See 'Technical Description' page 23.

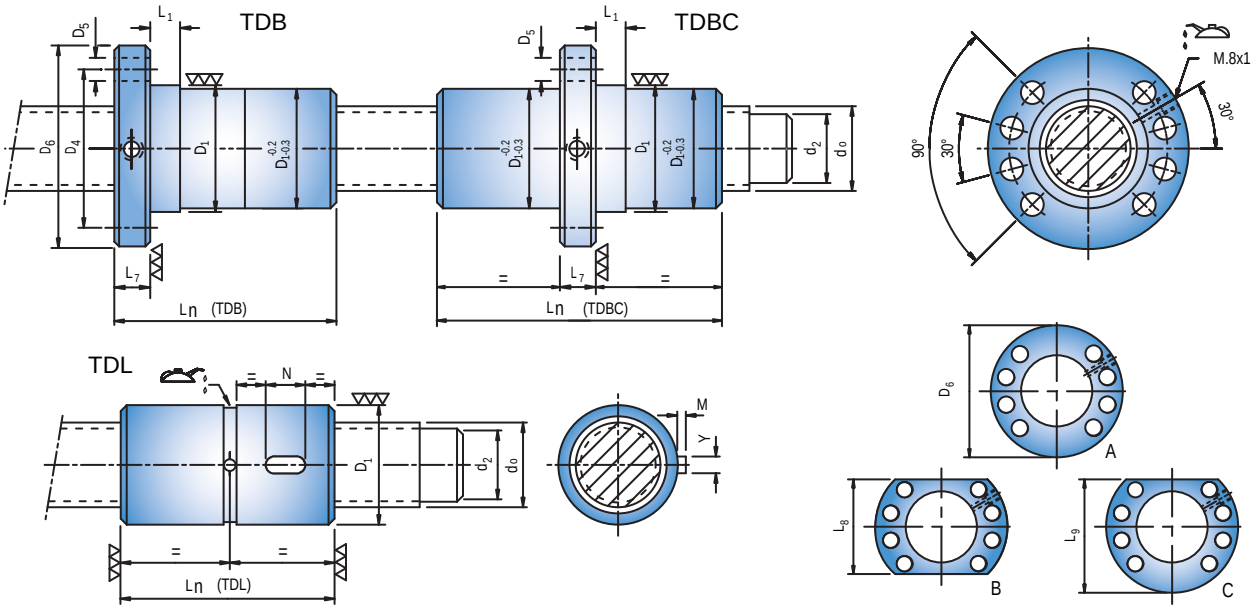

Only exceptional cases.
It is advised diameter do:50

BOLD: DIN 69051/5 dimensions

Length of the nut L_n ±1mm	D_1 g6	D_4 ± 0,2mm	D_6 h13	D_5 H13	L_7 h13 TDB	L_7 h13 TDBC	L_1 + 2mm 0	L_8 h13	L_9 h13	Code TDB-U TDBC-U TDL-U
129										TDx-U 4015-6-2
159										TDx-U 4015-6-3
189										TDx-U 4015-6-4
219					16					TDx-U 4015-6-5
134										TDx-U 4016-6-2
166										TDx-U 4016-6-3
198	65	**78**	**93**				**20**	**70**	**81,5**	TDx-U 4016-6-4
230										TDx-U 4016-6-5
157										TDx-U 4020-6-2
197	D_1:**63**									TDx-U 4020-6-3
237	Consult with SHUTON			**9**		20				TDx-U 4020-6-4
158										TDx-U 4025-6-2
208										TDx-U 4025-6-3
176										TDx-U 4030-6-2
236	**70**	**85**	**100**		18		**25**	**75**	**87,5**	TDx-U 4030-6-3
210	(66)	(**78**)	(**93**)				(**20**)	(**70**)	(**81,5**)	TDx-U 4040-6-2
140										TDx-U 4020-8-2
180										TDx-U 4020-8-3
220	**70**	**85**	**100**				**25**	**75**	**87,5**	TDx-U 4020-8-4
156										TDx-U 4025-8-2
206										TDx-U 4025-8-3
178										TDx-U 4030-8-2

Key dimensions of the cylindrical nut: N, M, Y are obtained in the tables of page 4 of the catalogue.
The use of dimensions of the tables is advised. In brackets () the second option. It is possible to manufacture the nuts with different dimensioning. Consult with SHUTON.
Smaller nut diameters than the first option of the table can reduce the rigidity of the assembly between 5 and 10%.

PRELOADED DOUBLE NUT

Steel Balls

TDB : Double Flanged

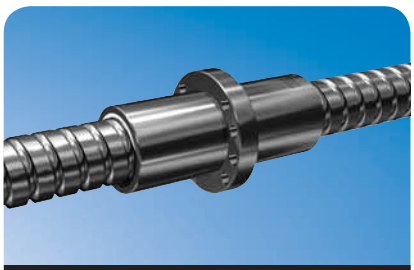

TDBC : Double Flanged Centre

TDL : Double Cylindrical

Only for old projects and spare parts.
It is advised the 'U' external recirculation
in the pages 26- 27

Code TDB TDBC TDL	Nominal diameter d_0	Lead P_h	Ball diameter D_w	Root diameter d_2	Circuits i	Dynamic load * C_a [N]	Static load * C_{oa} [N]	Rigidity of ball contact zone ** $R_{b/t,pr}$ [N/µm]	Rigidity of nut *** R_{nu} [N/µm]
TDx-S 5005-3-3	50	5	3,175	47,8	3 (2)	19000	58400	1610	1410
TDx-S 5005-3-4					4 (2)	24200	79100	2170	1910
TDx-S 5005-3-5					5 (2)	29300	100300	2740	2430
TDx-S 5005-3-6					6 (2)	34400	122000	3340	2980
TDx-S 5006-4-3		6	3,969	47,2	3 (2)	26900	75500	1680	1480
TDx-S 5006-4-4					4 (2)	34300	102100	2260	2000
TDx-S 5006-4-5					5 (2)	41600	129400	2860	2550
TDx-S 5006-4-6					6 (2)	48900	157300	3480	3120
TDx-U 5010-6-3		10	6,35	44,5	3 (2)	54100	116200	1950	1810
TDx-U 5010-6-4					4 (2)	69900	159900	2620	2430
TDx-U 5010-6-5					5 (2)	84800	202000	3230	3000
TDx-U 5010-6-6					6 (2)	99400	244100	3800	3530
TDx-S 5012-8-2		12	7,938	44,6	2 (2)	46300	83900	1020	930
TDx-S 5012-8-3					3 (2)	62900	127000	1500	1380
TDx-S 5012-8-4					4 (2)	79900	170700	1990	1840
TDx-S 5012-8-5					5 (2)	96700	215100	2500	2300
TDx-S 5015-8-2		15			2 (2)	46200	83800	1020	950
TDx-S 5015-8-3					3 (2)	62800	126800	1490	1400
TDx-S 5015-8-4					4 (2)	79700	170500	1990	1860
TDx-S 5015-8-5					5 (2)	96500	214800	2490	2330
TDx-S 5016-8-2		16			2 (2)	46200	83800	1020	950
TDx-S 5016-8-3					3 (2)	62700	126700	1490	1400
TDx-S 5016-8-4					4 (2)	79600	170400	1980	1860
TDx-S 5016-8-5					5 (2)	96500	214700	2490	2340
TDx-S 5020-8-2		20			2 (2)	45800	82900	950	890
TDx-S 5020-8-3					3 (2)	61900	124400	1370	1290
TDx-S 5020-8-4					4 (2)	78200	165800	1800	1690
TDx-S 5020-8-5					5 (2)	94300	207300	2220	2090

* Ca and Coa : Modified static and dynamic load capacities, calculated according to DIN 69051/4 standard and ISO3408/5. See 'Technical Description' pages 11-16.
** Rb/t,pr : Rigidity of the balls contact zone for a preload force 10% of Ca. See 'Technical Description' page 22. For a different preload force, multiply by $\sqrt[3]{F_{pr}/0,1\,C_a}$
*** Rnu : Total rigidity of the complete nut. It must be multiplied by the factor 'far' which depends on the manufacturing tolerance. See 'Technical Description' page 23.

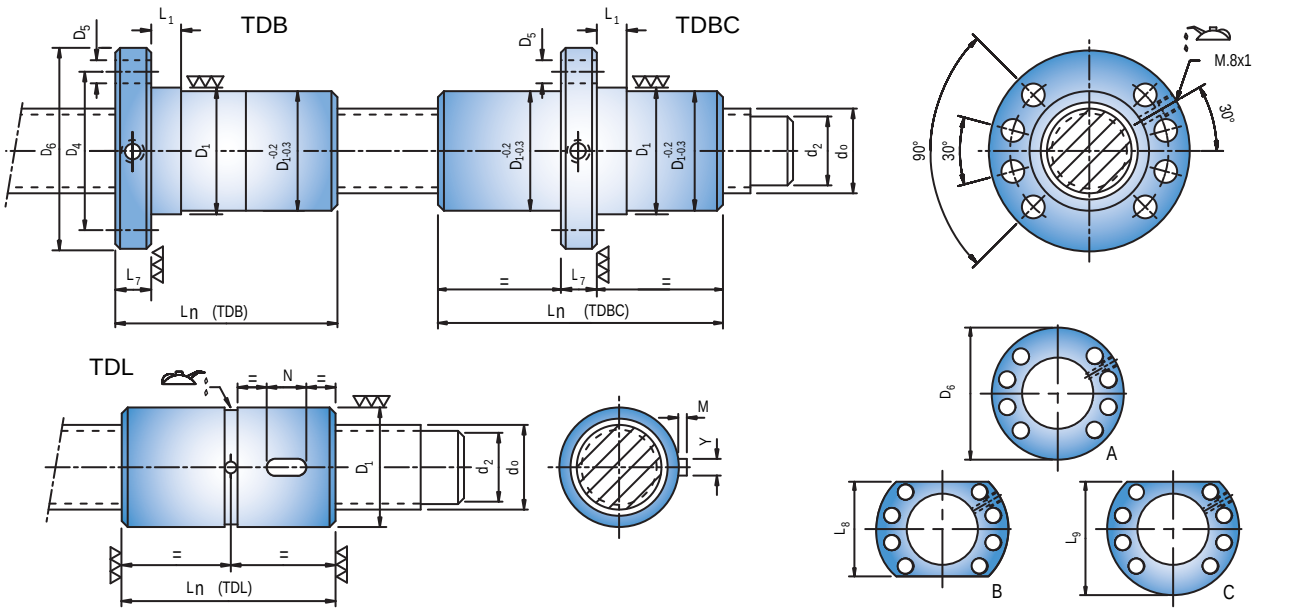

Only for old projects and spare parts. It is advised the 'U' external recirculation in the pages 26- 27

BOLD: DIN 69051/5 dimensions

Length of the nut L_n ±1mm TDB	TDBC	TDL	D_1 g6	D_4 ± 0,2mm	D_6 h13	D_5 H13	L_7 h13 TDB	TDBC	L_1 + 2mm 0	L_8 h13	L_9 h13	Code TDB TDBC TDL
90	87	80										TDx-S 5005-3-3
101	98	91										TDx-S 5005-3-4
111	108	102										TDx-S 5005-3-5
121	118	112										TDx-S 5005-3-6
99	96	90						**16**	**10**			TDx-S 5006-4-3
112	109	103										TDx-S 5006-4-4
124	122	115										TDx-S 5006-4-5
136	134	128										TDx-S 5006-4-6
	128											TDx-U 5010-6-3
	148											TDx-U 5010-6-4
	168								16			TDx-U 5010-6-5
	188											TDx-U 5010-6-6
141	143	132					**16**					TDx-S 5012-8-2
167	171	160	**75**	**93**	**110**	**11**				**85**	**97,5**	TDx-S 5012-8-3
192	197	186										TDx-S 5012-8-4
216	222	211										TDx-S 5012-8-5
154	161	150										TDx-S 5015-8-2
193	196	185						20				TDx-S 5015-8-3
221	228	217										TDx-S 5015-8-4
253	260	249							**20**			TDx-S 5015-8-5
157	159	148										TDx-S 5016-8-2
190	196	185										TDx-S 5016-8-3
224	231	220										TDx-S 5016-8-4
257	264	253										TDx-S 5016-8-5
175	180	169										TDx-S 5020-8-2
222	227	216					18					TDx-S 5020-8-3
265	270	259										TDx-S 5020-8-4
307	312	301										TDx-S 5020-8-5

Key dimensions of the cylindrical nut: N, M, Y are obtained in the tables of page 4 of the catalogue.
It is advised to use the dimensions of the tables, although it is possible to manufacture ballscrew with other dimensions. Consult with SHUTON.
Smaller nut diameters than indicated in the tables can reduce the rigidity of the assembly between 5 and 10%.

PRELOADED DOUBLE NUT

Steel Balls

TDB : Double Flanged

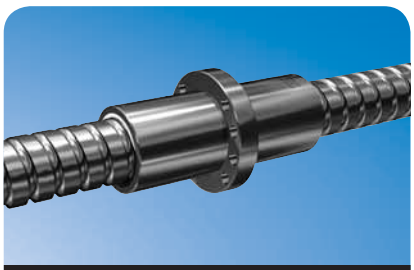

TDBC : Double Flanged Centre

TDL : Double Cylindrical

Code TDB-U TDBC-U TDL-U	Nominal diameter d_0	Lead P_h	Ball diameter D_w	Root diameter d_2	Circuits i	Dynamic load * C_a [N]	Static load * C_{oa} [N]	Rigidity of ball contact zone ** $R_{b/t,pr}$ [N/µm]	Rigidity of nut *** R_{nu} [N/µm]
TDx-U 5020-6-2	50	20	6,35	44,5	2 (2)	38600	73600	1300	1250
TDx-U 5020-6-3					3 (2)	54200	117200	1960	1880
TDx-U 5020-6-4					4 (2)	69400	159000	2590	2490
TDx-U 5020-6-5					5 (2)	84600	202500	3220	3100
TDx-U 5025-6-2		25			2 (2)	39000	75000	1320	1280
TDx-U 5025-6-3					3 (2)	53900	116700	1940	1880
TDx-U 5025-6-4					4 (2)	69500	160000	2590	2510
TDx-U 5030-6-2		30			2 (2)	38700	74600	1300	1270
TDx-U 5030-6-3					3 (2)	54100	117700	1950	1900
TDx-U 5040-6-2		40			2 (2)	38600	75300	1290	1270
TDx-U 5040-6-3				45,6	3 (2)	45700	102300	1310	1270
TDx-U 5050-6-2		50			2 (2)	32400	64900	860	840
TDx-U 5015-8-2		15	7,938	43,3	2 (2)	52500	93800	1400	1350
TDx-U 5015-8-3					3 (2)	74600	151700	2160	2080
TDx-U 5015-8-4					4 (2)	95700	206900	2890	2770
TDx-U 5015-8-5					5 (2)	117100	264800	3580	3440
TDx-U 5016-8-2		16			2 (2)	52500	93700	1400	1350
TDx-U 5016-8-3					3 (2)	74500	151600	2160	2080
TDx-U 5016-8-4					4 (2)	95600	206800	2880	2780
TDx-U 5016-8-5					5 (2)	117000	264700	3580	3450
TDx-U 5020-8-2		20			2 (2)	53300	96200	1430	1390
TDx-U 5020-8-3					3 (2)	74300	151200	2150	2090
TDx-U 5020-8-4					4 (2)	96100	209000	2900	2820
TDx-U 5020-8-5					5 (2)	116600	263900	3560	3450
TDx-U 5025-8-2		25			2 (2)	53000	95800	1420	1380
TDx-U 5025-8-3					3 (2)	73900	150600	2130	2080
TDx-U 5025-8-4					4 (2)	95600	208100	2880	2810
TDx-U 5030-8-2		30			2 (2)	52700	95300	1400	1370
TDx-U 5030-8-3					3 (2)	74200	152500	2140	2100
TDx-U 5040-8-2		40			2 (2)	52800	96800	1400	1380
TDx-U 5040-8-3					3 (2)	67900	144900	1660	1630
TDx-U 5050-8-2		50			2 (2)	48100	91700	1080	1060

* Ca and Coa : Modified static and dynamic load capacities, calculated according to DIN 69051/4 standard and ISO3408/5. See 'Technical Description' pages 11-16.
** Rb/t,pr : Rigidity of the balls contact zone for a preload force 10% of Ca. See 'Technical Description' page 22. For a different preload force, multiply by $\sqrt[3]{F_{pr}/0,1\,C_a}$
*** Rnu : Total rigidity of the complete nut. It must be multiplied by the factor 'far' which depends on the manufacturing tolerance. See 'Technical Description' page 23.

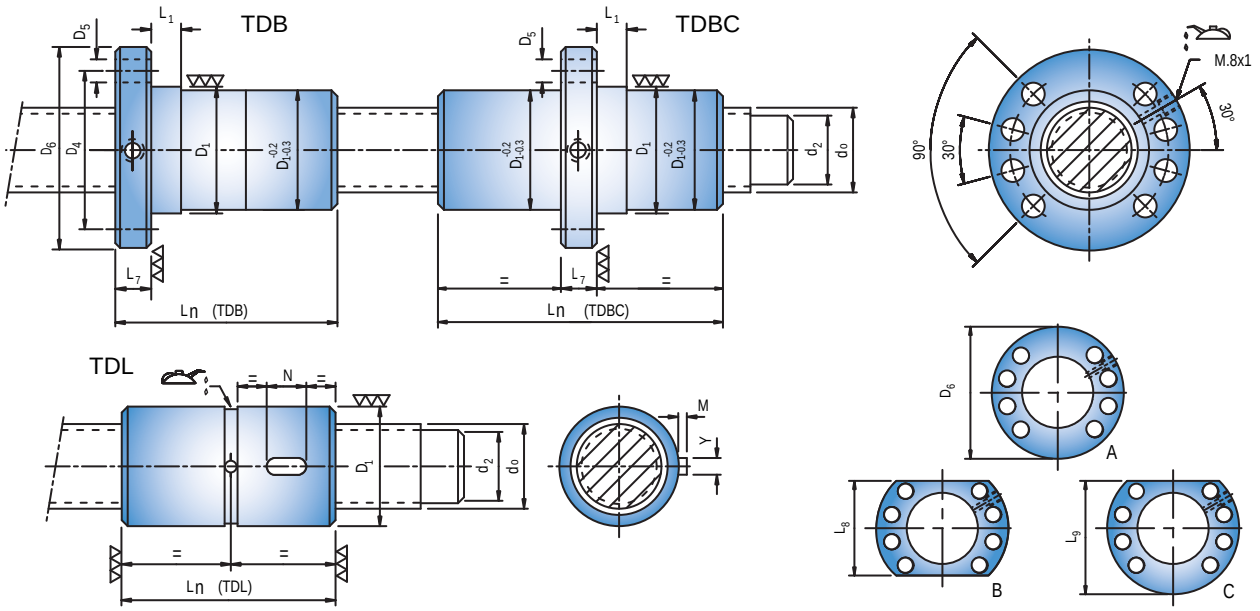

BOLD: DIN 69051/5 dimensions

Length of the nut L_n ±1mm	D_1 g6	D_4 ± 0,2mm	D_6 h13	D_5 H13	L_7 h13 TDB	L_7 h13 TDBC	L_1 + 2mm 0	L_8 h13	L_9 h13	Code TDB-U TDBC-U TDL-U
158										TDx-U 5020-6-2
198										TDx-U 5020-6-3
238										TDx-U 5020-6-4
278										TDx-U 5020-6-5
160										TDx-U 5025-6-2
210	**75**	**93**	**110**		18	25	25	**85**	**97,5**	TDx-U 5025-6-3
260										TDx-U 5025-6-4
186										TDx-U 5030-6-2
246										TDx-U 5030-6-3
214										TDx-U 5040-6-2
294	76									TDx-U 5040-6-3
248										TDx-U 5050-6-2
134										TDx-U 5015-8-2
164										TDx-U 5015-8-3
194										TDx-U 5015-8-4
224				**11**	**16**	20				TDx-U 5015-8-5
140										TDx-U 5016-8-2
172										TDx-U 5016-8-3
204										TDx-U 5016-8-4
236										TDx-U 5016-8-5
144										TDx-U 5020-8-2
184	**82**	**100**	**118**				**25**	**92**	**105**	TDx-U 5020-8-3
224										TDx-U 5020-8-4
264										TDx-U 5020-8-5
164										TDx-U 5025-8-2
214					18	25				TDx-U 5025-8-3
260										TDx-U 5025-8-4
188										TDx-U 5030-8-2
248										TDx-U 5030-8-3
218										TDx-U 5040-8-2
298										TDx-U 5040-8-3
252										TDx-U 5050-8-2

Key dimensions of the cylindrical nut: N, M, Y are obtained in the tables of page 4 of the catalogue.
It is advised to use the dimensions of the tables, although it is possible to manufacture ballscrew with other dimensions. Consult with SHUTON.
Smaller nut diameters than indicated in the tables can reduce the rigidity of the assembly between 5 and 10%.

PRELOADED DOUBLE NUT

Steel Balls

TDB : Double Flanged

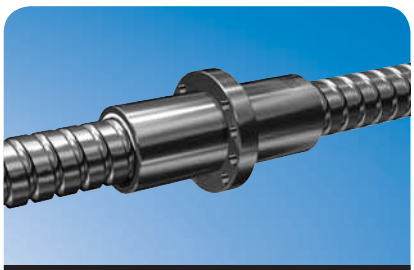

TDBC : Double Flanged Centre

TDL : Double Cylindrical

Code TDB TDBC TDL	Nominal diameter d_0	Lead P_h	Ball diameter D_w	Root diameter d_2	Circuits i	Dynamic load * C_a [N]	Static load * C_{oa} [N]	Rigidity of ball contact zone ** $R_{b/t,pr}$ [N/µm]	Rigidity of nut *** R_{nu} [N/µm]
TDx-S 6305-3-3	63	5	3,175	60,8	3 (2)	21000	74900	1970	1650
TDx-S 6305-3-4					4 (2)	26700	101400	2650	2240
TDx-S 6305-3-5					5 (2)	32400	128600	3350	2860
TDx-S 6305-3-6					6 (2)	38000	156400	4080	3510
TDx-U 6310-6-3		10	6,35	57,5	3 (2)	61500	151400	2440	2210
TDx-U 6310-6-4					4 (2)	78300	204100	3170	2880
TDx-U 6310-6-5					5 (2)	95200	258500	3930	3570
TDx-U 6310-6-6					6 (2)	111800	313000	4660	4240
TDx-U 6312-8-3		12	7,938	56,3	3 (2)	84700	195800	2670	2490
TDx-U 6312-8-4					4 (2)	109000	268500	3570	3330
TDx-U 6312-8-5					5 (2)	132200	338500	4370	4080
TDx-U 6312-8-6					6 (2)	155500	411200	5200	4860
TDx-U 6315-8-3		15			3 (2)	84600	195600	2670	2520
TDx-U 6315-8-4					4 (2)	108900	268300	3560	3370
TDx-U 6315-8-5					5 (2)	132700	340900	4390	4160
TDx-U 6315-8-6					6 (2)	155300	410800	5190	4910
TDx-U 6316-8-3		16			3 (2)	84500	195500	2670	2530
TDx-U 6316-8-4					4 (2)	108900	268200	3560	3380
TDx-U 6316-8-5					5 (2)	132700	340800	4390	4170
TDx-U 6316-8-6					6 (2)	155200	410600	5180	4920

* Ca and Coa : Modified static and dynamic load capacities, calculated according to DIN 69051/4 standard and ISO3408/5. See 'Technical Description' pages 11-16.
** Rb/t,pr : Rigidity of the balls contact zone for a preload force 10% of Ca. See 'Technical Description' page 22. For a different preload force, multiply by $\sqrt[3]{F_{pr}/0,1\,C_a}$
*** Rnu : Total rigidity of the complete nut. It must be multiplied by the factor 'far' which depends on the manufacturing tolerance. See 'Technical Description' page 23.

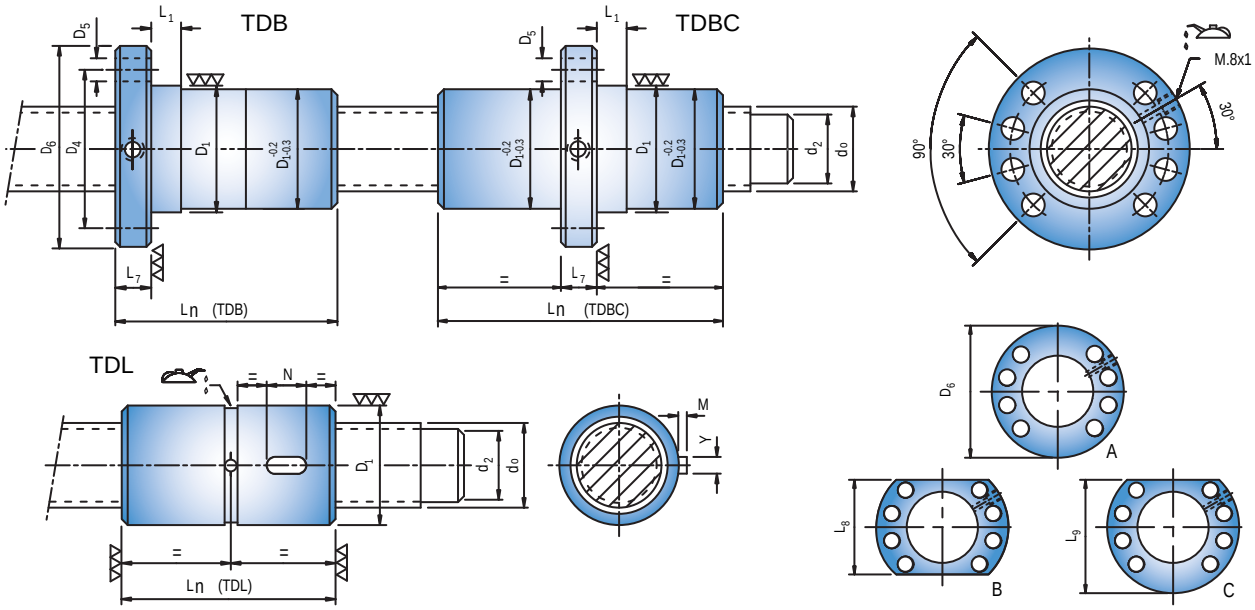

BOLD: DIN 69051/5 dimensions

Length of the nut L_n ±1mm			D_1	D_4	D_6	D_5	L_7 h13		L_1	L_8	L_9	Code TDB TDBC TDL
TDB	TDBC	TDL	g6	± 0,2mm	h13	H13	TDB	TDBC	+ 2mm 0	h13	h13	
92	89	80	**90**	**108**	**125**	**11**	**18**	**18**	16	**95**	**110**	TDx-S 6305-3-3
103	100	91										TDx-S 6305-3-4
113	110	102										TDx-S 6305-3-5
123	121	112										TDx-S 6305-3-6
122								20				TDx-U 6310-6-3
142												TDx-U 6310-6-4
162												TDx-U 6310-6-5
182												TDx-U 6310-6-6
153			**95**	**115**	**135**	**13,5**	**20**	25	**25**	**100**	**117,5**	TDx-U 6312-8-3
177												TDx-U 6312-8-4
201												TDx-U 6312-8-5
225												TDx-U 6312-8-6
165												TDx-U 6315-8-3
195												TDx-U 6315-8-4
225												TDx-U 6315-8-5
255												TDx-U 6315-8-6
172												TDx-U 6316-8-3
204												TDx-U 6316-8-4
236												TDx-U 6316-8-5
268												TDx-U 6316-8-6

Key dimensions of the cylindrical nut: N, M, Y are obtained in the tables of page 4 of the catalogue.
It is advised to use the dimensions of the tables, although it is possible to manufacture ballscrew with other dimensions. Consult with SHUTON.
Smaller nut diameters than indicated in the tables can reduce the rigidity of the assembly between 5 and 10%.

PRELOADED DOUBLE NUT

Steel Balls

TDB : Double Flanged

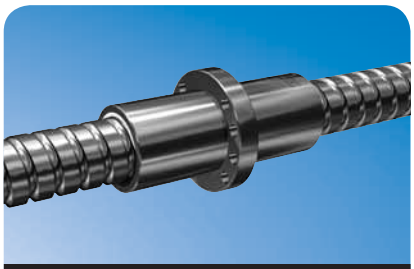

TDBC : Double Flanged Centre

TDL : Double Cylindrical

Code TDB-U TDBC-U TDL-U	Nominal diameter d_0	Lead P_h	Ball diameter D_w	Root diameter d_2	Circuits i	Dynamic load * C_a [N]	Static load * C_{oa} [N]	Rigidity of ball contact zone ** $R_{b/t,pr}$ [N/µm]	Rigidity of nut *** R_{nu} [N/µm]
TDx-U 6320-8-2	63	20	7,938	56,3	2 (2)	61000	125500	1800	1730
TDx-U 6320-8-3					3 (2)	84400	195200	2660	2550
TDx-U 6320-8-4					4 (2)	108600	267700	3550	3400
TDx-U 6320-8-5					5 (2)	132400	340200	4380	4200
TDx-U 6320-8-6					6 (2)	154900	409900	5160	4960
TDx-U 6325-8-2		25			2 (2)	60800	125100	1790	1730
TDx-U 6325-8-3					3 (2)	84900	197400	2680	2590
TDx-U 6325-8-4					4 (2)	108200	267000	3530	3410
TDx-U 6325-8-5					5 (2)	131900	339300	4350	4210
TDx-U 6330-8-2		30			2 (2)	60500	124700	1780	1730
TDx-U 6330-8-3					3 (2)	84500	196800	2660	2580
TDx-U 6330-8-4					4 (2)	108500	268900	3540	3440
TDx-U 6340-8-2		40			2 (2)	60700	126500	1780	1750
TDx-U 6340-8-3					3 (2)	84400	197900	2650	2590
TDx-U 6350-8-2		50			2 (2)	59900	125100	1740	1720
TDx-U 6320-9-2		20	9,525	55,2	2 (2)	77200	149100	1800	1730
TDx-U 6320-9-3					3 (2)	107400	233700	2700	2600
TDx-U 6320-9-4					4 (2)	138800	322400	3610	3480
TDx-U 6320-9-5					5 (2)	168400	407000	4470	4300
TDx-U 6320-9-6					6 (2)	198500	495700	5290	5100
TDx-U 6325-9-2		25			2 (2)	77000	148700	1790	1740
TDx-U 6325-9-3					3 (2)	107000	233100	2690	2610
TDx-U 6325-9-4					4 (2)	138400	321500	3590	3480
TDx-U 6325-9-5					5 (2)	169000	409900	4480	4350
TDx-U 6330-9-2		30			2 (2)	76700	148200	1780	1730
TDx-U 6330-9-3					3 (2)	107800	236400	2710	2640
TDx-U 6330-9-4					4 (2)	137800	320500	3560	3480
TDx-U 6340-9-2		40			2 (2)	75800	147000	1750	1720
TDx-U 6340-9-3					3 (2)	106700	234400	2670	2620
TDx-U 6350-9-2		50			2 (2)	76200	149500	1750	1730
TDx-U 6350-9-3					3 (2)	106500	236000	2650	2610

* Ca and Coa : Modified static and dynamic load capacities, calculated according to DIN 69051/4 standard and ISO3408/5. See 'Technical Description' pages 11-16.
** Rb/t,pr : Rigidity of the balls contact zone for a preload force 10% of Ca. See 'Technical Description' page 22. For a different preload force, multiply by $\sqrt[3]{F_{pr}/0,1\,C_a}$
*** Rnu : Total rigidity of the complete nut. It must be multiplied by the factor 'far' which depends on the manufacturing tolerance. See 'Technical Description' page 23.

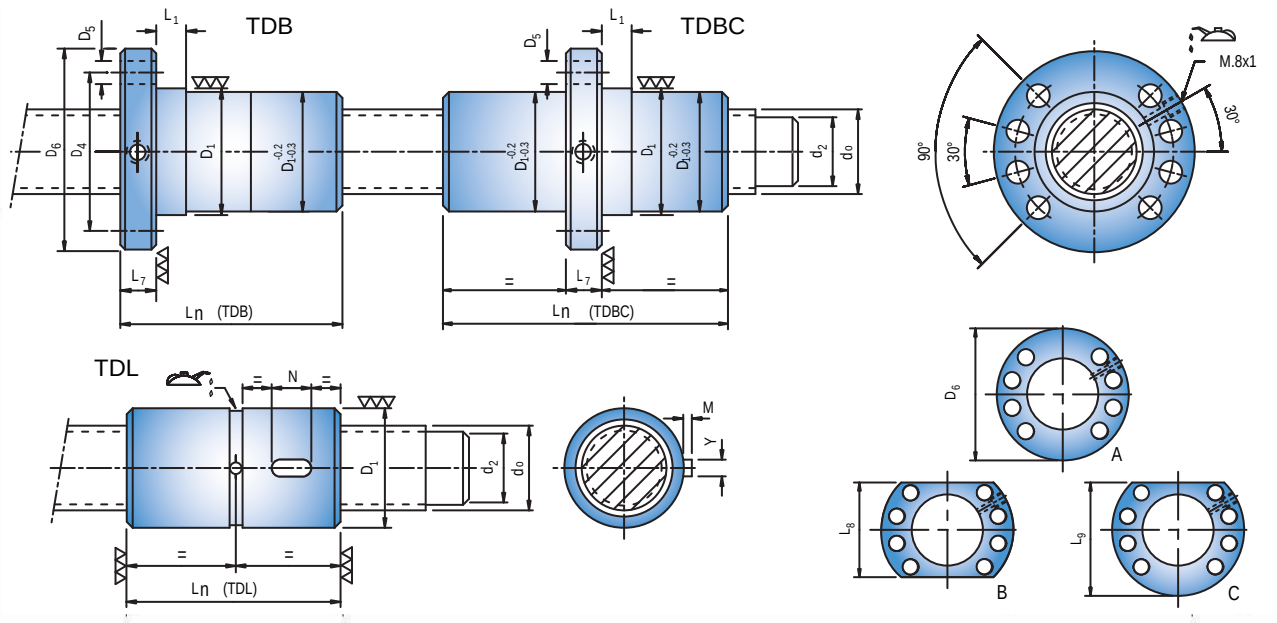

BOLD: DIN 69051/5 dimensions

Length of the nut L_n ±1mm	D_1 g6	D_4 ± 0,2mm	D_6 h13	D_5 H13	L_7 h13 TDB	L_7 h13 TDBC	L_1 + 2mm 0	L_8 h13	L_9 h13	Code TDB-U TDBC-U TDL-U
164										TDx-U 6320-8-2
204										TDx-U 6320-8-3
244										TDx-U 6320-8-4
284										TDx-U 6320-8-5
324										TDx-U 6320-8-6
164										TDx-U 6325-8-2
214										TDx-U 6325-8-3
264	**95**	**115**	**135**					**100**	**117,5**	TDx-U 6325-8-4
314										TDx-U 6325-8-5
189										TDx-U 6330-8-2
249										TDx-U 6330-8-3
309										TDx-U 6330-8-4
216										TDx-U 6340-8-2
296										TDx-U 6340-8-3
256										TDx-U 6350-8-2
169										TDx-U 6320-9-2
209										TDx-U 6320-9-3
249										TDx-U 6320-9-4
289										TDx-U 6320-9-5
329										TDx-U 6320-9-6
172										TDx-U 6325-9-2
222										TDx-U 6325-9-3
272	**105**	**125**	**145**	**13,5**	**20**	25	**25**	**110**	**127,5**	TDx-U 6325-9-4
322										TDx-U 6325-9-5
196										TDx-U 6330-9-2
256										TDx-U 6330-9-3
316										TDx-U 6330-9-4
222										TDx-U 6340-9-2
302										TDx-U 6340-9-3
256										TDx-U 6350-9-2
356										TDx-U 6350-9-3

Key dimensions of the cylindrical nut: N, M, Y are obtained in the tables of page 4 of the catalogue.
It is advised to use the dimensions of the tables, although it is possible to manufacture ballscrew with other dimensions. Consult with SHUTON.
Smaller nut diameters than indicated in the tables can reduce the rigidity of the assembly between 5 and 10%.

PRELOADED DOUBLE NUT

Steel Balls

TDB : Double Flanged

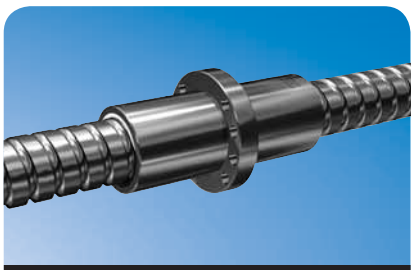

TDBC : Double Flanged Centre

TDL : Double Cylindrical

Code TDB TDBC TDL	Nominal diameter d_0	Lead P_h	Ball diameter D_w	Root diameter d_2	Circuits i	Dynamic load * C_a [N]	Static load * C_{oa} [N]	Rigidity of ball contact zone ** $R_{b/t,pr}$ [N/µm]	Rigidity of nut *** R_{nu} [N/µm]
TDx-S 8010-6-3	80	10	6,35	74,5	3 (2)	67800	190400	3030	2610
TDx-S 8010-6-4					4 (2)	85600	253800	3960	3420
TDx-S 8010-6-5					5 (2)	103200	317300	4890	4230
TDx-S 8010-6-6					6 (2)	120400	380700	5820	5040
TDx-U 8012-8-3		12	7,938	73,3	3 (2)	95700	254200	3290	3050
TDx-U 8012-8-4					4 (2)	122900	347500	4370	4050
TDx-U 8012-8-5					5 (2)	148900	437900	5390	5000
TDx-U 8012-8-6					6 (2)	174400	528300	6350	5900
TDx-U 8015-8-3		15			3 (2)	95600	254100	3280	3090
TDx-U 8015-8-4					4 (2)	122800	347300	4370	4110
TDx-U 8015-8-5					5 (2)	148800	437600	5390	5070
TDx-U 8015-8-6					6 (2)	174300	527900	6340	5980
TDx-U 8016-8-3		16			3 (2)	95600	254000	3280	3100
TDx-U 8016-8-4					4 (2)	122800	347200	4370	4120
TDx-U 8016-8-5					5 (2)	148800	437500	5380	5090
TDx-U 8016-8-6					6 (2)	174200	527800	6340	6000

* Ca and Coa : Modified static and dynamic load capacities, calculated according to DIN 69051/4 standard and ISO3408/5. See 'Technical Description' pages 11-16.
** Rb/t,pr : Rigidity of the balls contact zone for a preload force 10% of Ca. See 'Technical Description' page 22. For a different preload force, multiply by $\sqrt[3]{F_{pr}/0,1\,C_a}$
*** Rnu : Total rigidity of the complete nut. It must be multiplied by the factor 'far' which depends on the manufacturing tolerance. See 'Technical Description' page 23.

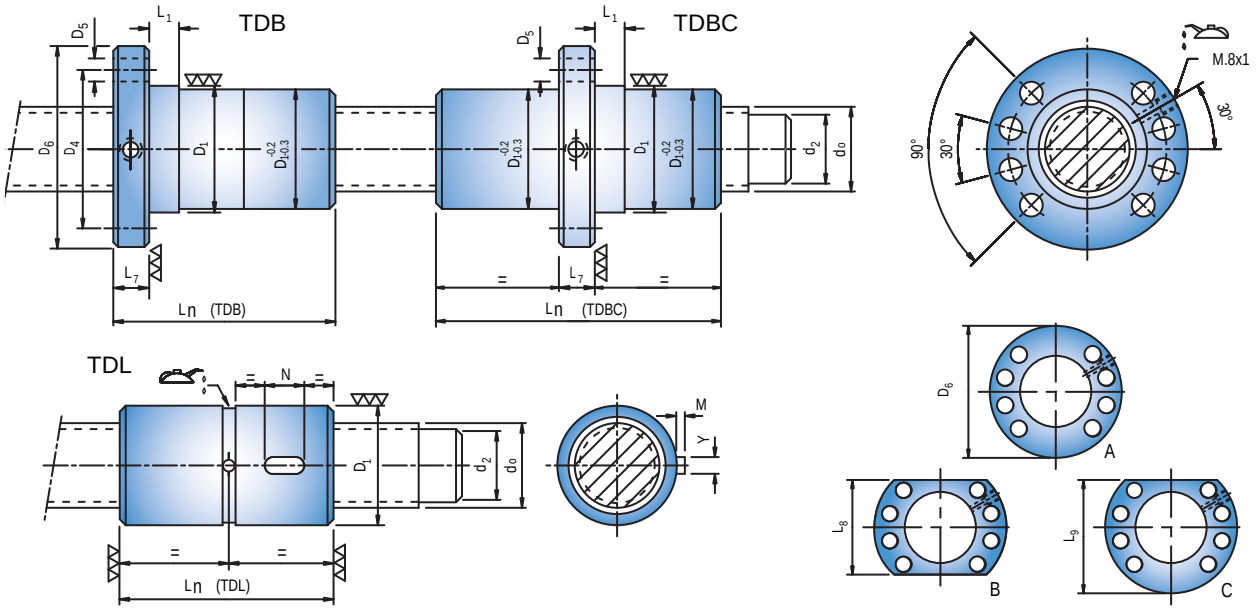

BOLD: DIN 69051/5 dimensions

Length of the nut L_n ±1mm			D_1	D_4	D_6	D_5	L_7 h13		L_1	L_8	L_9	Code TDB TDBC TDL
TDB	TDBC	TDL	g6	± 0,2mm	h13	H13	TDB	TDBC	+ 2mm 0	h13	h13	
145	156	140	**105**	**125**	**145**	**13,5**	**20**	25	16	**110**	**127,5**	TDx-S 8010-6-3
165	178	162										TDx-S 8010-6-4
193	199	183										TDx-S 8010-6-5
214	220	204										TDx-S 8010-6-6
	154		**125**	**145**	**165**		**25**	**25**	**25**	**130**	**147,5**	TDx-U 8012-8-3
	178											TDx-U 8012-8-4
	202											TDx-U 8012-8-5
	226											TDx-U 8012-8-6
	165											TDx-U 8015-8-3
	195											TDx-U 8015-8-4
	225											TDx-U 8015-8-5
	255											TDx-U 8015-8-6
	173											TDx-U 8016-8-3
	205											TDx-U 8016-8-4
	237											TDx-U 8016-8-5
	269											TDx-U 8016-8-6

Key dimensions of the cylindrical nut: N, M, Y are obtained in the tables of page 4 of the catalogue.
It is advised to use the dimensions of the tables, although it is possible to manufacture ballscrew with other dimensions. Consult with SHUTON.
Smaller nut diameters than indicated in the tables can reduce the rigidity of the assembly between 5 and 10%.

PRELOADED DOUBLE NUT

Steel Balls

TDB : Double Flanged

TDBC : Double Flanged Centre

TDL : Double Cylindrical

Code TDB-U TDBC-U TDL-U	Nominal diameter d_0	Lead P_h	Ball diameter D_w	Root diameter d_2	Circuits i	Dynamic load * C_a [N]	Static load * C_{oa} [N]	Rigidity of ball contact zone ** $R_{b/t,pr}$ [N/µm]	Rigidity of nut *** R_{nu} [N/µm]
TDx-U 8020-9-3	80	20	9,525	72,2	3 (2)	122700	306200	3380	3210
TDx-U 8020-9-4					4 (2)	157200	416400	4440	4230
TDx-U 8020-9-5					5 (2)	190900	526600	5500	5240
TDx-U 8020-9-6					6 (2)	223900	636800	6490	6180
TDx-U 8025-9-3		25			3 (2)	122500	305600	3370	3230
TDx-U 8025-9-4					4 (2)	156800	415700	4430	4260
TDx-U 8025-9-5					5 (2)	190500	525700	5480	5270
TDx-U 8025-9-6					6 (2)	224400	639800	6500	6260
TDx-U 8030-9-2		30			2 (2)	88000	195200	2230	2150
TDx-U 8030-9-3					3 (2)	122200	305000	3350	3240
TDx-U 8030-9-4					4 (2)	156400	414800	4410	4270
TDx-U 8030-9-5					5 (2)	191000	528700	5500	5320
TDx-U 8040-9-2		40			2 (2)	87400	194200	2200	2150
TDx-U 8040-9-3					3 (2)	122400	307500	3360	3270
TDx-U 8040-9-4					4 (2)	156400	416700	4400	4290
TDx-U 8050-9-2		50			2 (2)	87900	197000	2210	2170
TDx-U 8050-9-3					3 (2)	121400	305500	3310	3250
TDx-U 8020-12-3		20	12,7	71	3 (2)	180700	413300	3570	3400
TDx-U 8020-12-4					4 (2)	233100	568400	4750	4530
TDx-U 8020-12-5					5 (2)	284300	723400	5920	5650
TDx-U 8020-12-6					6 (2)	334400	878400	7040	6720
TDx-U 8025-12-3		25			3 (2)	180300	412700	3550	3420
TDx-U 8025-12-4					4 (2)	232600	567400	4730	4560
TDx-U 8025-12-5					5 (2)	283700	722200	5900	5690
TDx-U 8025-12-6					6 (2)	333700	877000	7020	6760
TDx-U 8030-12-2		30			2 (2)	127600	257400	2310	2240
TDx-U 8030-12-3					3 (2)	179900	411900	3540	3430
TDx-U 8030-12-4					4 (2)	232000	566300	4710	4570
TDx-U 8030-12-5					5 (2)	283000	720800	5880	5700
TDx-U 8040-12-2		40			2 (2)	129200	263500	2350	2300
TDx-U 8040-12-3					3 (2)	180800	417200	3560	3480
TDx-U 8040-12-4					4 (2)	232500	570900	4720	4610
TDx-U 8050-12-2		50			2 (2)	128100	261800	2320	2280
TDx-U 8050-12-3					3 (2)	179400	414600	3520	3450

* Ca and Coa : Modified static and dynamic load capacities, calculated according to DIN 69051/4 standard and ISO3408/5. See 'Technical Description' pages 11-16.
** Rb/t,pr : Rigidity of the balls contact zone for a preload force 10% of Ca. See 'Technical Description' page 22. For a different preload force, multiply by $\sqrt[3]{F_{pr}/0,1\,C_a}$
*** Rnu : Total rigidity of the complete nut. It must be multiplied by the factor 'far' which depends on the manufacturing tolerance. See 'Technical Description' page 23.

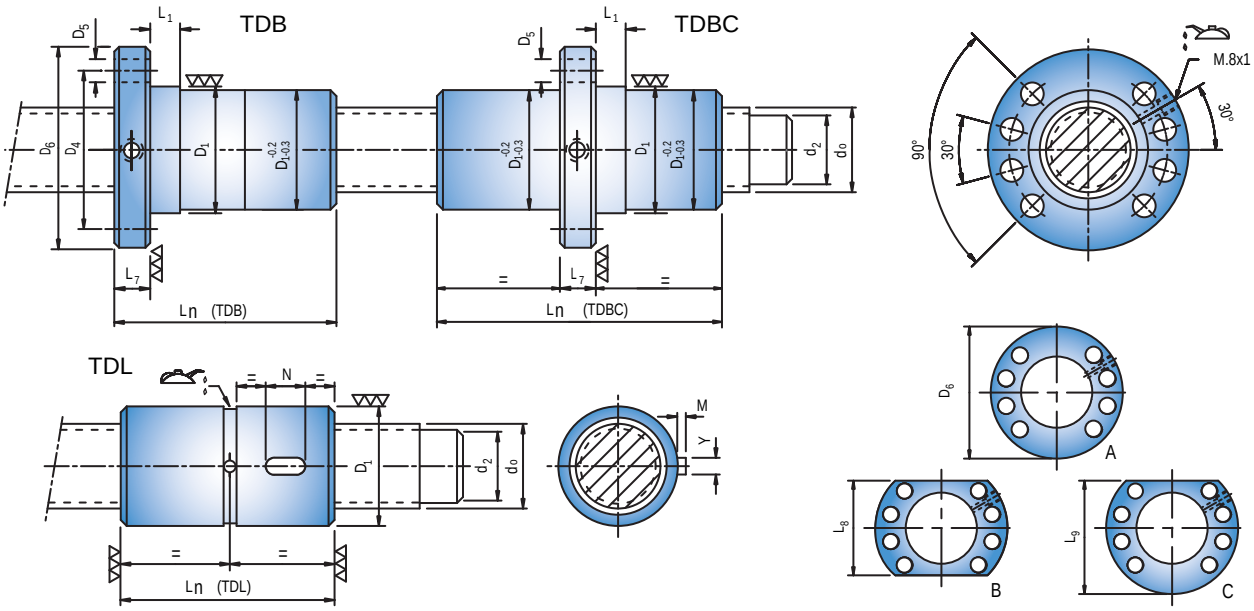

BOLD: DIN 69051/5 dimensions

Length of the nut L_n ±1mm	D_1 g6	D_4 ± 0,2mm	D_6 h13	D_5 H13	L_7 h13 TDB	L_7 h13 TDBC	L_1 + 2mm 0	L_8 h13	L_9 h13	Code TDB-U TDBC-U TDL-U
198										TDx-U 8020-9-3
238										TDx-U 8020-9-4
278										TDx-U 8020-9-5
318										TDx-U 8020-9-6
226										TDx-U 8025-9-3
276										TDx-U 8025-9-4
326										TDx-U 8025-9-5
376										TDx-U 8025-9-6
198	**125**	**145**	**165**					**130**	**147,5**	TDx-U 8030-9-2
258										TDx-U 8030-9-3
318										TDx-U 8030-9-4
378										TDx-U 8030-9-5
228										TDx-U 8040-9-2
308										TDx-U 8040-9-3
388										TDx-U 8040-9-4
262										TDx-U 8050-9-2
362				**13,5**	**25**	30	**25**			TDx-U 8050-9-3
220										TDx-U 8020-12-3
260										TDx-U 8020-12-4
300										TDx-U 8020-12-5
340										TDx-U 8020-12-6
258										TDx-U 8025-12-3
308										TDx-U 8025-12-4
358										TDx-U 8025-12-5
408										TDx-U 8025-12-6
208	**135**	**155**	**175**					**140**	**157,5**	TDx-U 8030-12-2
268										TDx-U 8030-12-3
328										TDx-U 8030-12-4
388										TDx-U 8030-12-5
254										TDx-U 8040-12-2
334										TDx-U 8040-12-3
402										TDx-U 8040-12-4
274										TDx-U 8050-12-2
374										TDx-U 8050-12-3

Key dimensions of the cylindrical nut: N, M, Y are obtained in the tables of page 4 of the catalogue.
It is advised to use the dimensions of the tables, although it is possible to manufacture ballscrew with other dimensions. Consult with SHUTON.
Smaller nut diameters than indicated in the tables can reduce the rigidity of the assembly between 5 and 10%.

PRELOADED DOUBLE NUT

Steel Balls

TDB : Double Flanged

TDBC : Double Flanged Centre

TDL : Double Cylindrical

Code TDB TDBC TDL	Nominal diameter d_0	Lead P_h	Ball diameter D_w	Root diameter d_2	Circuits i	Dynamic load * C_a [N]	Static load * C_{oa} [N]	Rigidity of ball contact zone ** $R_{b/t,pr}$ [N/µm]	Rigidity of nut *** R_{nu} [N/µm]
TDx-S 10010-6-3	100	10	6,35	94,5	3 (2)	74400	238100	3620	2960
TDx-S 10010-6-4					4 (2)	94000	317400	4740	3890
TDx-S 10010-6-5					5 (2)	113300	396800	5860	4810
TDx-S 10010-6-6					6 (2)	132200	476200	6970	5730
TDx-U 10012-8-3		12	7,938	93,3	3 (2)	106700	324400	4020	3650
TDx-U 10012-8-4					4 (2)	136000	438200	5260	4780
TDx-U 10012-8-5					5 (2)	165300	554800	6520	5930
TDx-U 10012-8-6					6 (2)	193500	668600	7670	6980
TDx-U 10015-8-3		15			3 (2)	106600	324200	4020	3720
TDx-U 10015-8-4					4 (2)	135900	438000	5260	4870
TDx-U 10015-8-5					5 (2)	165200	554600	6520	6040
TDx-U 10015-8-6					6 (2)	193400	668400	7660	7110
TDx-U 10016-8-3		16			3 (2)	106600	324200	4020	3730
TDx-U 10016-8-4					4 (2)	135900	437900	5260	4890
TDx-U 10016-8-5					5 (2)	165200	554500	6510	6060
TDx-U 10016-8-6					6 (2)	193300	668300	7660	7140

* Ca and Coa : Modified static and dynamic load capacities, calculated according to DIN 69051/4 standard and ISO3408/5. See 'Technical Description' pages 11-16.
** Rb/t,pr : Rigidity of the balls contact zone for a preload force 10% of Ca. See 'Technical Description' page 22. For a different preload force, multiply by $\sqrt[3]{F_{pr}/0,1\,C_a}$
*** Rnu : Total rigidity of the complete nut. It must be multiplied by the factor 'far' which depends on the manufacturing tolerance. See 'Technical Description' page 23.

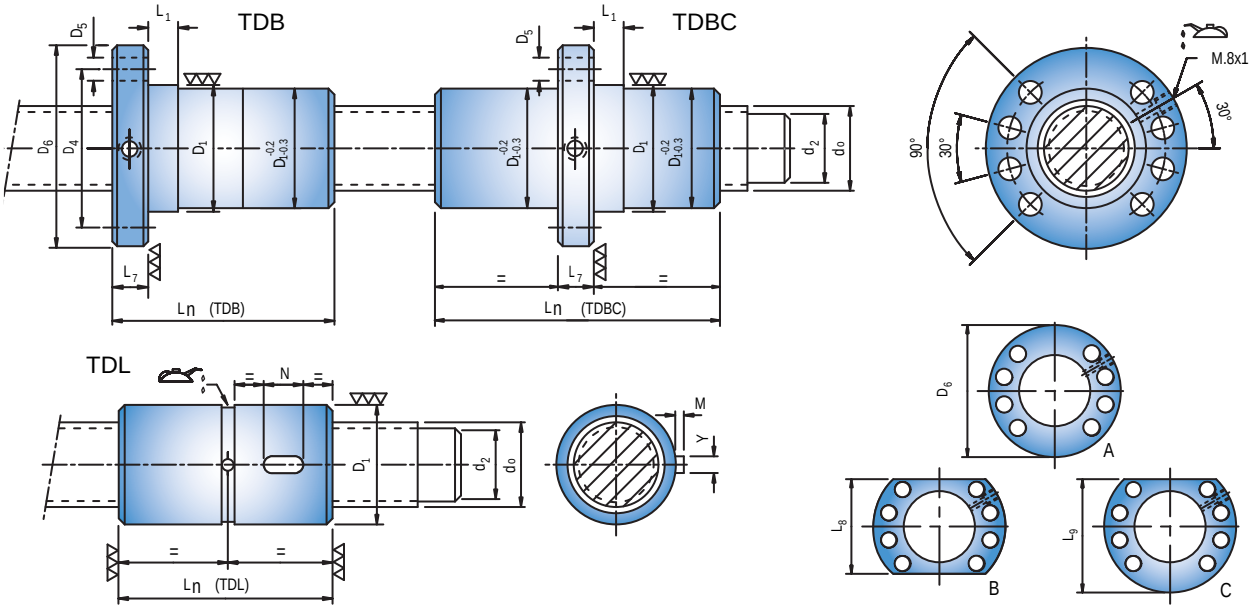

BOLD: DIN 69051/5 dimensions

Length of the nut L_n ±1mm			D_1	D_4	D_6	D_5	L_7 h13		L_1	L_8	L_9	Code TDB TDBC TDL
TDB	TDBC	TDL	g6	± 0,2mm	h13	H13	TDB	TDBC	+ 2mm 0	h13	h13	
147	156	140	**125**	**145**	**165**	**13,5**	**22**	25	16	**130**	**147,5**	TDx-S 10010-6-3
167	178	162										TDx-S 10010-6-4
195	199	183										TDx-S 10010-6-5
216	220	204										TDx-S 10010-6-6
	154		**150**	**176**	**202**	**17,5**	**30**	**30**	**25**	**155**	**178,5**	TDx-U 10012-8-3
	178											TDx-U 10012-8-4
	202											TDx-U 10012-8-5
	226											TDx-U 10012-8-6
	166											TDx-U 10015-8-3
	196											TDx-U 10015-8-4
	226											TDx-U 10015-8-5
	256											TDx-U 10015-8-6
	174											TDx-U 10016-8-3
	206											TDx-U 10016-8-4
	238											TDx-U 10016-8-5
	270											TDx-U 10016-8-6

Key dimensions of the cylindrical nut: N, M, Y are obtained in the tables of page 4 of the catalogue.
It is advised to use the dimensions of the tables, although it is possible to manufacture ballscrew with other dimensions. Consult with SHUTON.
Smaller nut diameters than indicated in the tables can reduce the rigidity of the assembly between 5 and 10%.

PRELOADED DOUBLE NUT

Steel Balls

TDB : Double Flanged

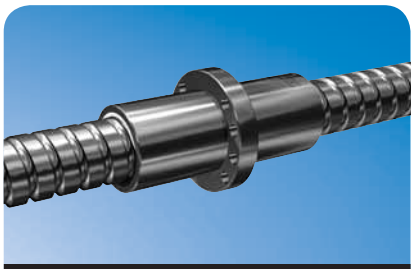

TDBC : Double Flanged Centre

TDL : Double Cylindrical

Code TDB-U TDBC-U TDL-U	Nominal diameter d_0	Lead P_h	Ball diameter D_w	Root diameter d_2	Circuits i	Dynamic load * C_a [N]	Static load * C_{oa} [N]	Rigidity of ball contact zone ** $R_{b/t,pr}$ [N/µm]	Rigidity of nut *** R_{nu} [N/µm]
TDx-U 10020-9-3	100	20	9,525	92,2	3 (2)	137600	391400	4100	3850
TDx-U 10020-9-4					4 (2)	175100	527400	5380	5060
TDx-U 10020-9-5					5 (2)	212800	667500	6640	6240
TDx-U 10020-9-6					6 (2)	249600	807500	7850	7390
TDx-U 10025-9-3		25			3 (2)	137400	391000	4090	3890
TDx-U 10025-9-4					4 (2)	174800	526800	5370	5110
TDx-U 10025-9-5					5 (2)	212500	666700	6620	6300
TDx-U 10025-9-6					6 (2)	249300	806700	7830	7460
TDx-U 10030-9-2		30			2 (2)	99100	250700	2730	2620
TDx-U 10030-9-3					3 (2)	137200	390500	4080	3910
TDx-U 10030-9-4					4 (2)	175400	530200	5400	5180
TDx-U 10030-9-5					5 (2)	212100	665800	6600	6340
TDx-U 10040-9-2		40			2 (2)	98600	249900	2710	2630
TDx-U 10040-9-3					3 (2)	136600	389200	4050	3930
TDx-U 10040-9-4					4 (2)	174700	528400	5360	5190
TDx-U 10050-9-2		50			2 (2)	99100	252900	2730	2660
TDx-U 10050-9-3					3 (2)	136700	391600	4060	3950
TDx-U 10020-12-3		20	12,7	91	3 (2)	204300	530100	4370	4090
TDx-U 10020-12-4					4 (2)	262400	724200	5820	5440
TDx-U 10020-12-5					5 (2)	317500	910800	7110	6650
TDx-U 10020-12-6					6 (2)	373200	1104900	8440	7910
TDx-U 10025-12-3		25			3 (2)	204000	529500	4360	4130
TDx-U 10025-12-4					4 (2)	262000	723400	5810	5500
TDx-U 10025-12-5					5 (2)	318800	917300	7150	6780
TDx-U 10025-12-6					6 (2)	372700	1103800	8430	7990
TDx-U 10030-12-2		30			2 (2)	145800	335200	2910	2780
TDx-U 10030-12-3					3 (2)	203700	528800	4350	4160
TDx-U 10030-12-4					4 (2)	261600	722500	5790	5530
TDx-U 10030-12-5					5 (2)	318300	916200	7130	6820
TDx-U 10040-12-2		40			2 (2)	145200	334100	2890	2790
TDx-U 10040-12-3					3 (2)	202800	527100	4320	4180
TDx-U 10040-12-4					4 (2)	260500	720200	5750	5560
TDx-U 10050-12-2		50			2 (2)	146600	340100	2930	2850
TDx-U 10050-12-3					3 (2)	203600	532300	4340	4230

* Ca and Coa : Modified static and dynamic load capacities, calculated according to DIN 69051/4 standard and ISO3408/5. See 'Technical Description' pages 11-16.
** Rb/t,pr : Rigidity of the balls contact zone for a preload force 10% of Ca. See 'Technical Description' page 22. For a different preload force, multiply by $\sqrt[3]{F_{pr}/0,1\,C_a}$
*** Rnu : Total rigidity of the complete nut. It must be multiplied by the factor 'far' which depends on the manufacturing tolerance. See 'Technical Description' page 23.

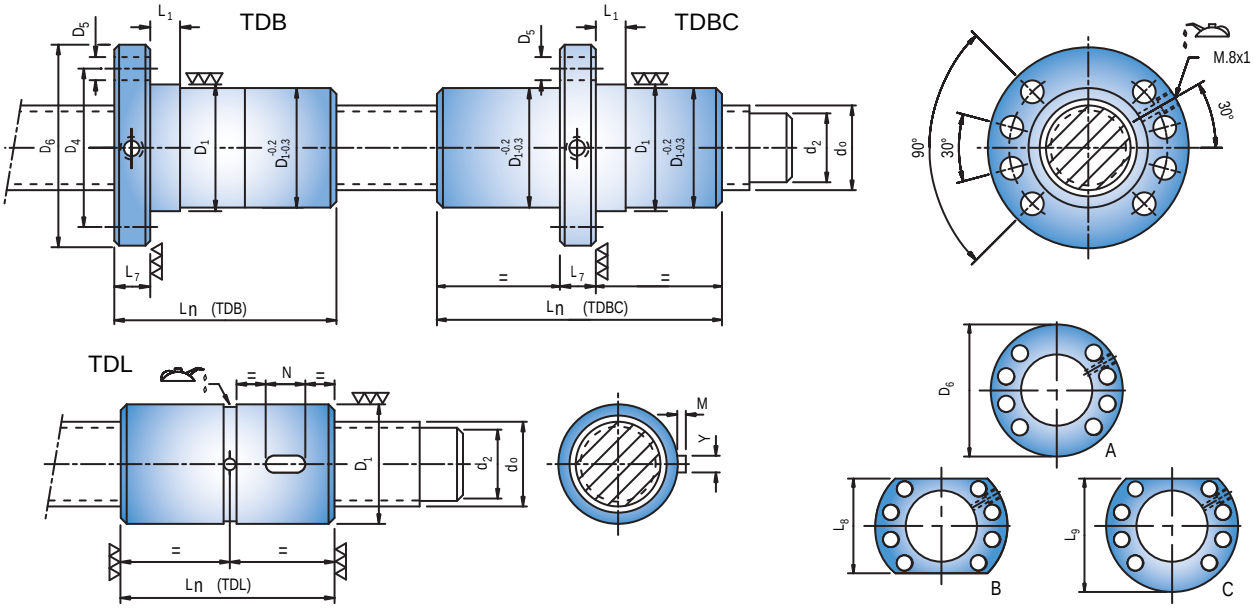

BOLD: DIN 69051/5 dimensions

Length of the nut L_n ±1mm	D_1 g6	D_4 ± 0,2mm	D_6 h13	D_5 H13	L_7 h13 TDB	L_7 h13 TDBC	L_1 + 2mm 0	L_8 h13	L_9 h13	Code TDB-U TDBC-U TDL-U
200										TDx-U 10020-9-3
240										TDx-U 10020-9-4
280										TDx-U 10020-9-5
320										TDx-U 10020-9-6
228										TDx-U 10025-9-3
278										TDx-U 10025-9-4
328										TDx-U 10025-9-5
378										TDx-U 10025-9-6
196										TDx-U 10030-9-2
256										TDx-U 10030-9-3
316										TDx-U 10030-9-4
376										TDx-U 10030-9-5
247										TDx-U 10040-9-2
327										TDx-U 10040-9-3
407										TDx-U 10040-9-4
268										TDx-U 10050-9-2
368	**150**	**176**	**202**	**17,5**	**30**	**30**	**25**	**155**	**178,5**	TDx-U 10050-9-3
221										TDx-U 10020-12-3
261										TDx-U 10020-12-4
301										TDx-U 10020-12-5
341										TDx-U 10020-12-6
244										TDx-U 10025-12-3
294										TDx-U 10025-12-4
344										TDx-U 10025-12-5
394										TDx-U 10025-12-6
212										TDx-U 10030-12-2
272										TDx-U 10030-12-3
332										TDx-U 10030-12-4
392										TDx-U 10030-12-5
256										TDx-U 10040-12-2
336										TDx-U 10040-12-3
416										TDx-U 10040-12-4
280										TDx-U 10050-12-2
380										TDx-U 10050-12-3

Key dimensions of the cylindrical nut: N, M, Y are obtained in the tables of page 4 of the catalogue.
It is advised to use the dimensions of the tables, although it is possible to manufacture ballscrew with other dimensions. Consult with SHUTON.
Smaller nut diameters than indicated in the tables can reduce the rigidity of the assembly between 5 and 10%.

PRELOADED DOUBLE NUT

Steel Balls

TDB : Double Flanged

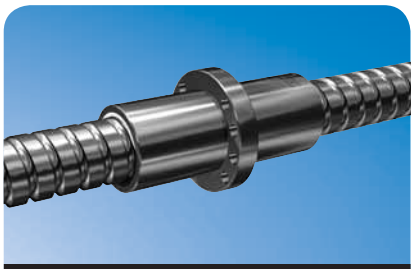

TDBC : Double Flanged Centre

TDL : Double Cylindrical

Code TDB-U TDBC-U TDL-U	Nominal diameter d_0	Lead P_h	Ball diameter D_w	Root diameter d_2	Circuits i	Dynamic load * C_a [N]	Static load * C_{oa} [N]	Rigidity of ball contact zone ** $R_{b/t,pr}$ [N/µm]	Rigidity of nut *** R_{nu} [N/µm]
TDx-U 12020-12-3	120	20	12,7	111	3 (2)	224200	646900	5140	4710
TDx-U 12020-12-4					4 (2)	285500	872500	6740	6180
TDx-U 12020-12-5					5 (2)	347300	1105700	8340	7650
TDx-U 12020-12-6					6 (2)	407700	1338900	9840	9050
TDx-U 12025-12-3		25			3 (2)	224000	646400	5140	4790
TDx-U 12025-12-4					4 (2)	285200	871900	6730	6280
TDx-U 12025-12-5					5 (2)	346900	1104900	8320	7770
TDx-U 12025-12-6					6 (2)	407300	1337900	9820	9180
TDx-U 12030-12-2		30			2 (2)	161200	413000	3430	3230
TDx-U 12030-12-3					3 (2)	223700	645800	5130	4830
TDx-U 12030-12-4					4 (2)	286500	878600	6770	6390
TDx-U 12030-12-5					5 (2)	346500	1103900	8310	7840
TDx-U 12040-12-2		40			2 (2)	160700	412100	3420	3270
TDx-U 12040-12-3					3 (2)	223100	644300	5100	4880
TDx-U 12040-12-4					4 (2)	285700	876600	6740	6450
TDx-U 12050-12-2		50			2 (2)	160100	410900	3390	3280
TDx-U 12050-12-3					3 (2)	222200	642500	5070	4890

* Ca and Coa : Modified static and dynamic load capacities, calculated according to DIN 69051/4 standard and ISO3408/5. See 'Technical Description' pages 11-16.
** Rb/t,pr : Rigidity of the balls contact zone for a preload force 10% of Ca. See 'Technical Description' page 22. For a different preload force, multiply by $\sqrt[3]{F_{pr}/0,1\,C_a}$
*** Rnu : Total rigidity of the complete nut. It must be multiplied by the factor 'far' which depends on the manufacturing tolerance. See 'Technical Description' page 23.

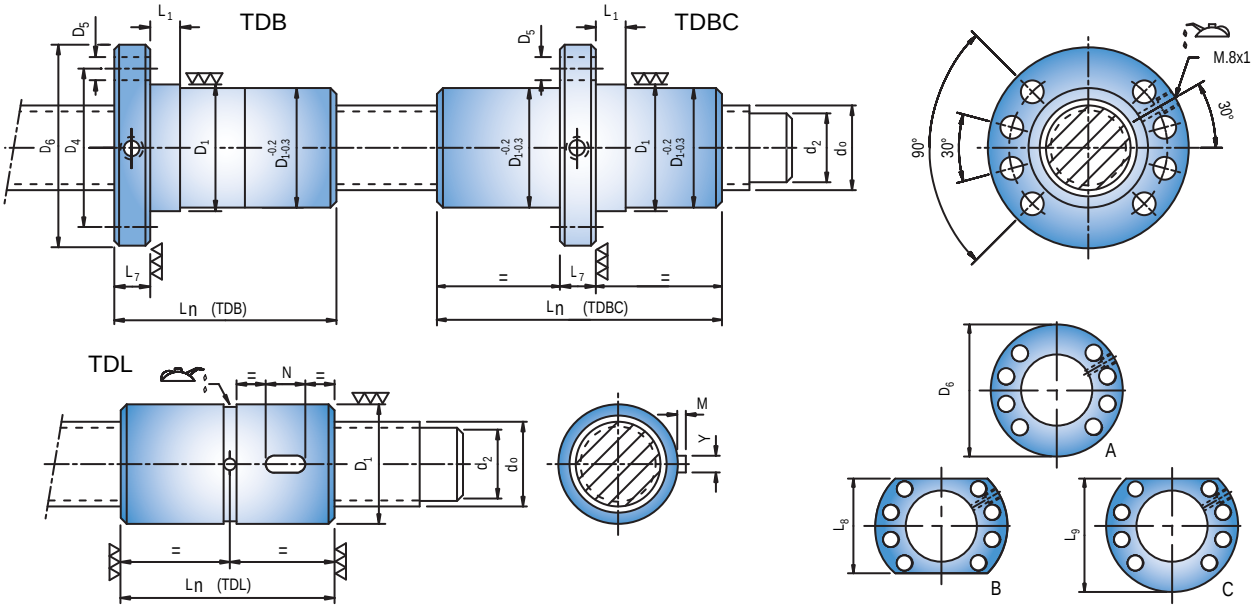

BOLD: DIN 69051/5 dimensions

Length of the nut L_n ±1mm	D_1 g6	D_4 ± 0,2mm	D_6 h13	D_5 H13	L_7 h13 TDB	L_7 h13 TDBC	L_1 + 2mm 0	L_8 h13	L_9 h13	Code TDB-U TDBC-U TDL-U
222	**170**	**196**	**222**	**17,5**	**30**	**30**	**25**	**175**	**198,5**	TDx-U 12020-12-3
262										TDx-U 12020-12-4
302										TDx-U 12020-12-5
342										TDx-U 12020-12-6
246										TDx-U 12025-12-3
296										TDx-U 12025-12-4
346										TDx-U 12025-12-5
396										TDx-U 12025-12-6
214										TDx-U 12030-12-2
274										TDx-U 12030-12-3
334										TDx-U 12030-12-4
394										TDx-U 12030-12-5
258										TDx-U 12040-12-2
338										TDx-U 12040-12-3
418										TDx-U 12040-12-4
284										TDx-U 12050-12-2
384										TDx-U 12050-12-3

Key dimensions of the cylindrical nut: N, M, Y are obtained in the tables of page 4 of the catalogue.
It is advised to use the dimensions of the tables, although it is possible to manufacture ballscrew with other dimensions. Consult with SHUTON.
Smaller nut diameters than indicated in the tables can reduce the rigidity of the assembly between 5 and 10%.

PRELOADED DOUBLE NUT

'U' External Recirculation - Ceramic Balls

The nut of these high-precision ballscrews is formed by two parts separated by a washer whose thickness determines the preload force.

At SHUTON these two parts are embedded, with a view to eliminating possible radial displacement and improving the alignment and concentricity of both parts.

The maintenance is very fast, because it is not necessary to disassemble the ballscrew from the machine, it is enough with disassembling the nut and replacing the washer for readjusting the preload.

Advantages of ceramic ball ballscrews:

· Increase of the dynamic load between 25% and 30% with respect to steel ball ballscrews. The result is that the life expectancy of the ballscrew is duplicated.

· Improvement of the axial rigidity between 10% and 15% with respect to steel ball ballscrews. It is possible to achieve a bigger increase if the preload is raised, but in this case the life expectancy of the ballscrew is not increased so much.

· Due to the characteristics of the ceramic material, the ballscrew temperature raise is reduced between 5 and 10 ºC.

· As the temperature is reduced, the ballscrew rotation speed can be increased with no overheating risk.

· The wear of the ballscrew is quite smaller, accordingly the preload loss during the time is less, increasing the ballscrew maintenance intervals.

· Reduction of the noise produced by the balls when they pass through the recirculation system.

Disadvantages of the ceramic balls ballscrews:

· It is required to be very careful with the impacts, since the ceramic balls can break and damage seriously the ballscrew.

· The cost of the ceramic balls is quite higher with respect to stell ball's one.

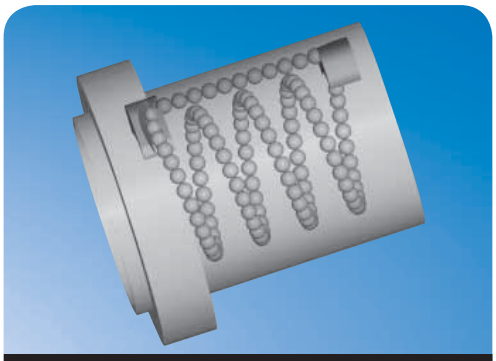

External Recirculation ‘U’

Nominal diameter & Lead, with the maximum number of circuits made at SHUTON of Standard Preloaded Double Nut, with external recirculation 'U', and ceramic balls.

P_h / d_0	10	15	20	25	30	40
40	5 (2)	5 (2)	4 (2)	3 (2)	2 (2)	
50	6 (2)	5 (2)	5 (2)	4 (2)	3 (2)	2 (2)
63	6 (2)	6 (2)	6 (2)	5 (2)	4 (2)	3 (2)
80			6 (2)	6 (2)	5 (2)	4 (2)

If especial cases out of range are required, consult with SHUTON

PRELOADED DOUBLE NUT

'U' External Recirculation - Ceramic Balls

TDB : Double Flanged

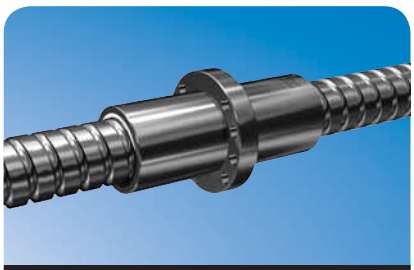

TDBC : Double Flanged Centre

TDL : Double Cylindrical

Code TDB-CER-U TDBC-CER-U TDL-CER-U	Nominal diameter d_0	Lead P_h	Ball diameter D_w	Root diameter d_2	Circuits i	Dynamic load C_a [N] *	Static load C_{oa} [N] *	Rigidity of ball contact zone $R_{b/t,pr}$ [N/µm] **	Rigidity of nut R_{nu} [N/µm] ***
TDx-CER-U 4010-6-3	40	10	6,35	34,5	3 (2)	60500	65800	1820	1700
TDx-CER-U 4010-6-4					4 (2)	77600	89800	2420	2270
TDx-CER-U 4010-6-5					5 (2)	94400	113700	2980	2790
TDx-CER-U 4015-6-3		15			3 (2)	60200	65600	1800	1730
TDx-CER-U 4015-6-4					4 (2)	77300	89400	2400	2310
TDx-CER-U 4015-6-5					5 (2)	94600	114500	2980	2860
TDx-CER-U 4020-6-2		20			2 (2)	43000	41500	1190	1150
TDx-CER-U 4020-6-3					3 (2)	59800	65200	1780	1730
TDx-CER-U 4020-6-4					4 (2)	77400	90100	2410	2330
TDx-CER-U 4025-6-2		25			2 (2)	42600	41200	1170	1140
TDx-CER-U 4025-6-3					3 (2)	60000	66000	1790	1740
TDx-CER-U 4030-6-2		30			2 (2)	42100	40900	1150	1130
TDx-CER-U 5010-6-3	50	10	6,35	44,5	3 (2)	68200	83600	2210	2030
TDx-CER-U 5010-6-4					4 (2)	88000	115200	2960	2720
TDx-CER-U 5010-6-5					5 (2)	106900	145500	3650	3360
TDx-CER-U 5010-6-6					6 (2)	125300	175800	4290	3960
TDx-CER-U 5015-8-3		15	7,938	43,3	3 (2)	94000	109200	2450	2340
TDx-CER-U 5015-8-4					4 (2)	120500	149000	3260	3110
TDx-CER-U 5015-8-5					5 (2)	147600	190700	4050	3870
TDx-CER-U 5020-8-3		20			3 (2)	93600	108900	2430	2350
TDx-CER-U 5020-8-4					4 (2)	121100	150400	3280	3170
TDx-CER-U 5020-8-5					5 (2)	146900	190000	4020	3890
TDx-CER-U 5025-8-2		25			2 (2)	66800	69000	1600	1560
TDx-CER-U 5025-8-3					3 (2)	93000	108400	2410	2340
TDx-CER-U 5025-8-4					4 (2)	120400	149800	3250	3160
TDx-CER-U 5030-8-2		30			2 (2)	66400	68600	1580	1550
TDx-CER-U 5030-8-3					3 (2)	93500	109800	2420	2370
TDx-CER-U 5040-8-2		40			2 (2)	66500	69700	1580	1560

* Ca and Coa : Modified static and dynamic load capacities, calculated according to DIN 69051/4 standard and ISO3408/5. See 'Technical Description' pages 11-16.
** Rb/t,pr : Rigidity of the balls contact zone for a preload force 10% of Ca. See 'Technical Description' page 22. For a different preload force, multiply by $\sqrt[3]{F_{pr}/0,1\,C_a}$
*** Rnu : Total rigidity of the complete nut. It must be multiplied by the factor 'far' which depends on the manufacturing tolerance. See 'Technical Description' page 23.

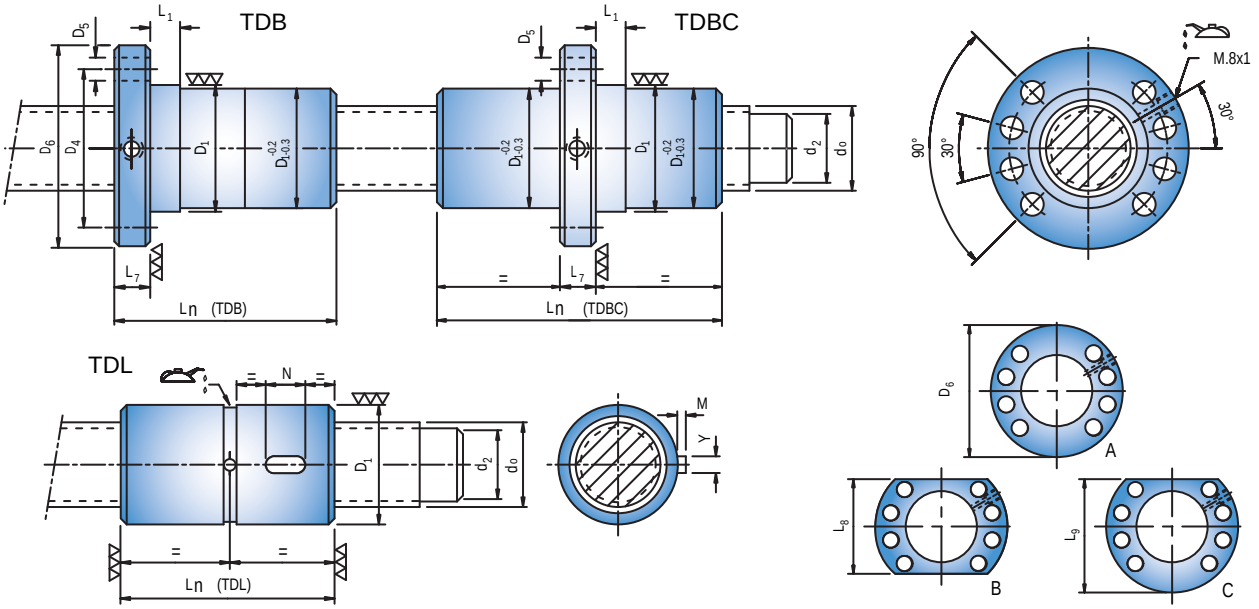

BOLD: DIN 69051/5 dimensions

Length of the nut L_n ±1mm	D_1 g6	D_4 ± 0,2mm	D_6 h13	D_5 H13	L_7 h13 TDB	L_7 h13 TDBC	L_1 + 2mm 0	L_8 h13	L_9 h13	Code TDB-CER-U TDBC-CER-U TDL-CER-U
127										TDx-CER-U 4010-6-3
147	**63**				**14**		16			TDx-CER-U 4010-6-4
167										TDx-CER-U 4010-6-5
159										TDx-CER-U 4015-6-3
189					16					TDx-CER-U 4015-6-4
219	65	**78**	**93**	**9**		20		**70**	**81,5**	TDx-CER-U 4015-6-5
157										TDx-CER-U 4020-6-2
197							**20**			TDx-CER-U 4020-6-3
237	D_1:**63**				18					TDx-CER-U 4020-6-4
158	Consult with SHUTON									TDx-CER-U 4025-6-2
208										TDx-CER-U 4025-6-3
176										TDx-CER-U 4030-6-2
128										TDx-CER-U 5010-6-3
148	**75**	**93**	**110**				16	**85**	**97,5**	TDx-CER-U 5010-6-4
168										TDx-CER-U 5010-6-5
188					**16**	20				TDx-CER-U 5010-6-6
164										TDx-CER-U 5015-8-3
194										TDx-CER-U 5015-8-4
224										TDx-CER-U 5015-8-5
184										TDx-CER-U 5020-8-3
224				**11**						TDx-CER-U 5020-8-4
264	**82**	**100**	**118**				**25**	**92**	**105**	TDx-CER-U 5020-8-5
164										TDx-CER-U 5025-8-2
214					18	25				TDx-CER-U 5025-8-3
260										TDx-CER-U 5025-8-4
188										TDx-CER-U 5030-8-2
248										TDx-CER-U 5030-8-3
218										TDx-CER-U 5040-8-2

Key dimensions of the cylindrical nut: N, M, Y are obtained in the tables of page 4 of the catalogue.
It is advised to use the dimensions of the tables, although it is possible to manufacture ballscrew with other dimensions. Consult with SHUTON.
Smaller nut diameters than indicated in the tables can reduce the rigidity of the assembly between 5 and 10%.

PRELOADED DOUBLE NUT

'U' External Recirculation - Ceramic Balls

TDB : Double Flanged

TDBC : Double Flanged Centre

TDL : Double Cylindrical

Code TDB-CER-U TDBC-CER-U TDL-CER-U	Nominal diameter d_0	Lead P_h	Ball diameter D_w	Root diameter d_2	Circuits i	Dynamic load * C_a [N]	Static load * C_{oa} [N]	Rigidity of ball contact zone ** $R_{b/t,pr}$ [N/µm]	Rigidity of nut *** R_{nu} [N/µm]
TDx-CER-U 6310-6-3	63	10	6,35	57,5	3 (2)	77500	109000	2750	2460
TDx-CER-U 6310-6-4					4 (2)	98700	147000	3580	3210
TDx-CER-U 6310-6-5					5 (2)	120000	186200	4440	3980
TDx-CER-U 6310-6-6					6 (2)	140800	225300	5260	4730
TDx-CER-U 6315-8-3		15	7,938	56,3	3 (2)	106600	140800	3010	2830
TDx-CER-U 6315-8-4					4 (2)	137200	193100	4020	3780
TDx-CER-U 6315-8-5					5 (2)	167200	245500	4960	4660
TDx-CER-U 6315-8-6					6 (2)	195700	295800	5860	5510
TDx-CER-U 6320-9-3		20	9,525	55,2	3 (2)	135300	168300	3050	2930
TDx-CER-U 6320-9-4					4 (2)	174900	232100	4080	3910
TDx-CER-U 6320-9-5					5 (2)	212200	293000	5040	4840
TDx-CER-U 6320-9-6					6 (2)	250100	356900	5980	5740
TDx-CER-U 6325-9-3		25			3 (2)	134900	167800	3030	2930
TDx-CER-U 6325-9-4					4 (2)	174300	231500	4050	3920
TDx-CER-U 6325-9-5					5 (2)	212900	295200	5060	4900
TDx-CER-U 6330-9-2		30			2 (2)	96600	106700	2010	1950
TDx-CER-U 6330-9-3					3 (2)	135800	170200	3060	2980
TDx-CER-U 6330-9-4					4 (2)	173600	230700	4030	3920
TDx-CER-U 6340-9-2		40			2 (2)	95600	105900	1970	1930
TDx-CER-U 6340-9-3					3 (2)	134400	168800	3010	2950
TDx-CER-U 8020-9-3	80	20	9,525	72,2	3 (2)	154700	220400	3820	3610
TDx-CER-U 8020-9-4					4 (2)	198000	299800	5020	4750
TDx-CER-U 8020-9-5					5 (2)	240500	379200	6210	5880
TDx-CER-U 8020-9-6					6 (2)	282100	458500	7330	6940
TDx-CER-U 8025-9-3		25			3 (2)	154300	220100	3800	3630
TDx-CER-U 8025-9-4					4 (2)	197600	299300	5000	4780
TDx-CER-U 8025-9-5					5 (2)	240000	378500	6190	5920
TDx-CER-U 8025-9-6					6 (2)	282700	460700	7350	7040
TDx-CER-U 8030-9-3		30			3 (2)	153900	219600	3780	3650
TDx-CER-U 8030-9-4					4 (2)	197100	298700	4980	4800
TDx-CER-U 8030-9-5					5 (2)	240600	380700	6210	5990
TDx-CER-U 8040-9-2		40			2 (2)	110200	139800	2490	2420
TDx-CER-U 8040-9-3					3 (2)	154200	221400	3790	3690
TDx-CER-U 8040-9-4					4 (2)	197000	300000	4970	4840

* Ca and Coa : Modified static and dynamic load capacities, calculated according to DIN 69051/4 standard and ISO3408/5. See 'Technical Description' pages 11-16.
** Rb/t,pr : Rigidity of the balls contact zone for a preload force 10% of Ca. See 'Technical Description' page 22. For a different preload force, multiply by $\sqrt[3]{F_{pr}/0,1\,C_a}$
*** Rnu : Total rigidity of the complete nut. It must be multiplied by the factor 'far' which depends on the manufacturing tolerance. See 'Technical Description' page 23.

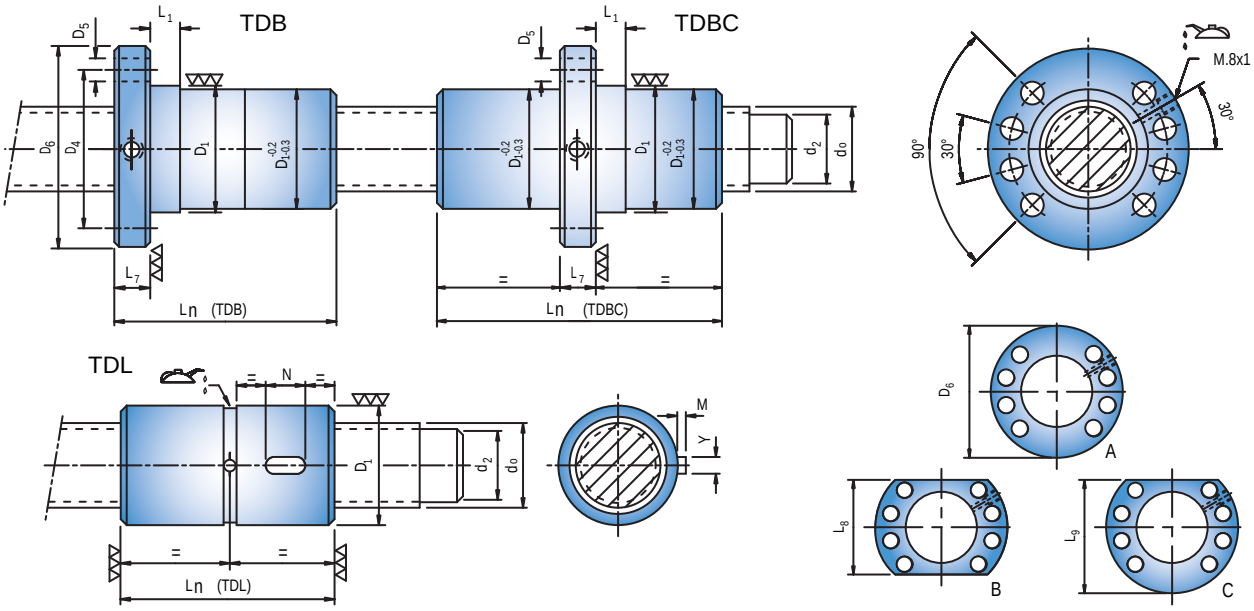

BOLD: DIN 69051/5 dimensions

Length of the nut L_n ±1mm	D_1 g6	D_4 ± 0,2mm	D_6 h13	D_5 H13	L_7 h13 TDB	L_7 h13 TDBC	L_1 + 2mm 0	L_8 h13	L_9 h13	Code TDB-CER-U TDBC-CER-U TDL-CER-U
122	**90**	**108**	**125**	**11**	**18**	20	16	**95**	**110**	TDx-CER-U 6310-6-3
142										TDx-CER-U 6310-6-4
162										TDx-CER-U 6310-6-5
182										TDx-CER-U 6310-6-6
165	**95**	**115**	**135**	**13,5**	**20**	25	**25**	**100**	**117,5**	TDx-CER-U 6315-8-3
195										TDx-CER-U 6315-8-4
225										TDx-CER-U 6315-8-5
255										TDx-CER-U 6315-8-6
209	**105**	**125**	**145**					**110**	**127,5**	TDx-CER-U 6320-9-3
249										TDx-CER-U 6320-9-4
289										TDx-CER-U 6320-9-5
329										TDx-CER-U 6320-9-6
222										TDx-CER-U 6325-9-3
272										TDx-CER-U 6325-9-4
322										TDx-CER-U 6325-9-5
196										TDx-CER-U 6330-9-2
256										TDx-CER-U 6330-9-3
316										TDx-CER-U 6330-9-4
222										TDx-CER-U 6340-9-2
302										TDx-CER-U 6340-9-3
198	**125**	**145**	**165**	**13,5**	**25**	30	**25**	**130**	**147,5**	TDx-CER-U 8020-9-3
238										TDx-CER-U 8020-9-4
278										TDx-CER-U 8020-9-5
318										TDx-CER-U 8020-9-6
226										TDx-CER-U 8025-9-3
276										TDx-CER-U 8025-9-4
326										TDx-CER-U 8025-9-5
376										TDx-CER-U 8025-9-6
258										TDx-CER-U 8030-9-3
318										TDx-CER-U 8030-9-4
378										TDx-CER-U 8030-9-5
228										TDx-CER-U 8040-9-2
308										TDx-CER-U 8040-9-3
388										TDx-CER-U 8040-9-4

Key dimensions of the cylindrical nut: N, M, Y are obtained in the tables of page 4 of the catalogue.
It is advised to use the dimensions of the tables, although it is possible to manufacture ballscrew with other dimensions. Consult with SHUTON.
Smaller nut diameters than indicated in the tables can reduce the rigidity of the assembly between 5 and 10%.

SINGLE NUT WITH LOW PRELOAD AND WITHOUT PLAY

Steel Balls

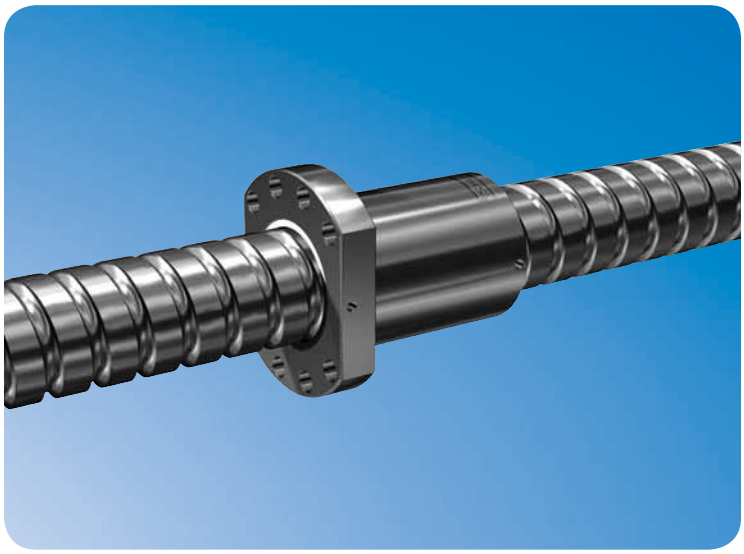

The backlash is eliminated using balls with a slightly bigger diameter,
so as the contact between the balls with the nut and the shaft is produced in four points.

The obtained preload is quite smaller than the one achieved with compact or double nut.
Is possible to eliminate the backlash with not need of adding a second part with circuits.
As a result, the nut length is smaller.

On the contrary, the rigidity of the single nut is variable, depends on the external load,
in contrast with the constant rigidity of the compact and double nuts.
Also, with the contact in four points it is impossible to avoid the sliding
with the thread of the nut and of the shaft in two of these points.
As a result, the wear and temperature increases.

By these reasons, SHUTON only advises the use of single nut in vertical
or inclined ballscrew where it is not possible the use of counterbalance.
The gravitational force transforms the contact in two points,
so that the sliding disappears and the wear and temperature are normal.

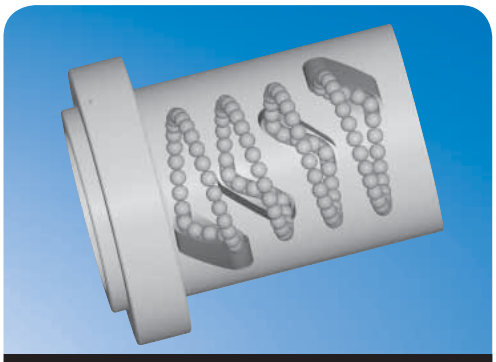

Internal Recirculation ‘S’

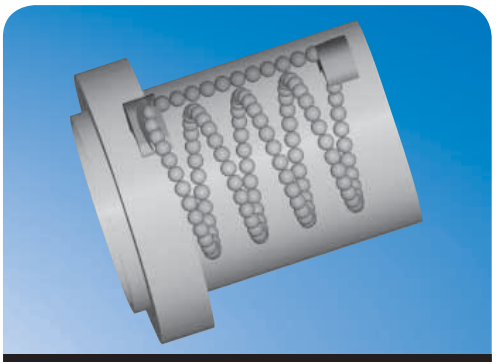

External Recirculation ‘U’

Nominal diameter & Lead, with the maximum number of circuits made at SHUTON of Standard Single Nut

Internal Recirculation 'S' External Recirculation 'U'

d_0 \ P_h	5	6	10	12	15	16	20	25	30	40	50
20	6										
25	6		4				2				
32	6		6				3	2			
40	6	6	6	6		5	4	3	3	2	
50	6	6	6	6	6	6	5	4	3	3	2
63	6		6	6		6	6	5	4	3	3
80			6	6		6	6	6	5	4	3
100			6	6		6	6	6	5	4	3

If especial cases out of range are required, consult with SHUTON

SINGLE NUT WITH LOW PRELOAD AND WITHOUT PLAY

Steel Balls

TSB : Flanged Single Nut

TSL : Single Cylindrical Nut

Code TSB TSL	Nominal diameter d_0	Lead P_h	Ball diameter D_w	Root diameter d_2	Circuits i	Dynamic load * C_a [N]	Static load * C_{oa} [N]	Rigidity of ball contact zone ** $R_{b/t}$ [N/µm]	Rigidity of nut *** R_{nu} [N/µm]
TSx-S 2005-3-3	20	5	3,175	17,8	3	11000	17900	360	330
TSx-S 2005-3-4					4	13900	23900	470	430
TSx-S 2005-3-5					5	16800	29900	580	540
TSx-S 2005-3-6					6	19600	35800	690	640
TSx-S 2505-3-3	25	5	3,175	22,8	3	12600	23500	450	400
TSx-S 2505-3-4					4	15900	31300	590	520
TSx-S 2505-3-5					5	19200	39200	730	650
TSx-S 2505-3-6					6	22400	47000	870	770
TSx-S 2510-5-2		10	4,762	21,7	2	16000	23300	320	290
TSx-S 2510-5-3					3	21700	34900	460	430
TSx-S 2510-5-4					4	27400	46500	600	560
TSx-U 2520-5-2		20			2	16400	24400	320	310
TSx-S 3205-3-3	32	5	3,175	29,8	3	14300	31300	570	490
TSx-S 3205-3-4					4	18100	41800	750	650
TSx-S 3205-3-5					5	21800	52200	930	800
TSx-S 3205-3-6					6	25500	62700	1100	950
TSx-S 3210-6-3		10	6,35	27,6	3	33300	54500	540	490
TSx-S 3210-6-4					4	42100	72700	710	650
TSx-S 3210-6-5					5	50800	90800	870	800
TSx-S 3210-6-6					6	59300	109000	1040	950
TSx-U 3220-5-2		20	4,762	28,7	2	19000	32600	410	390
TSx-U 3220-5-3					3	26400	51000	610	590
TSx-U 3225-5-2		25			2	18800	32300	400	390

* Ca and Coa : Modified static and dynamic load capacities, calculated according to DIN 69051/4 standard and ISO3408/5. See 'Technical Description' pages 11-16.

** Rb/t : Rigidity of the balls contact zone for an external force 20% of Ca. See 'Technical Description' page 21. For different forces, multiply by $\sqrt[3]{F/0,2\,C_a}$

*** Rnu : Total rigidity of the complete nut. It must be multiplied by the factor 'far' which depends on the manufacturing tolerance. See 'Technical Description' page 23

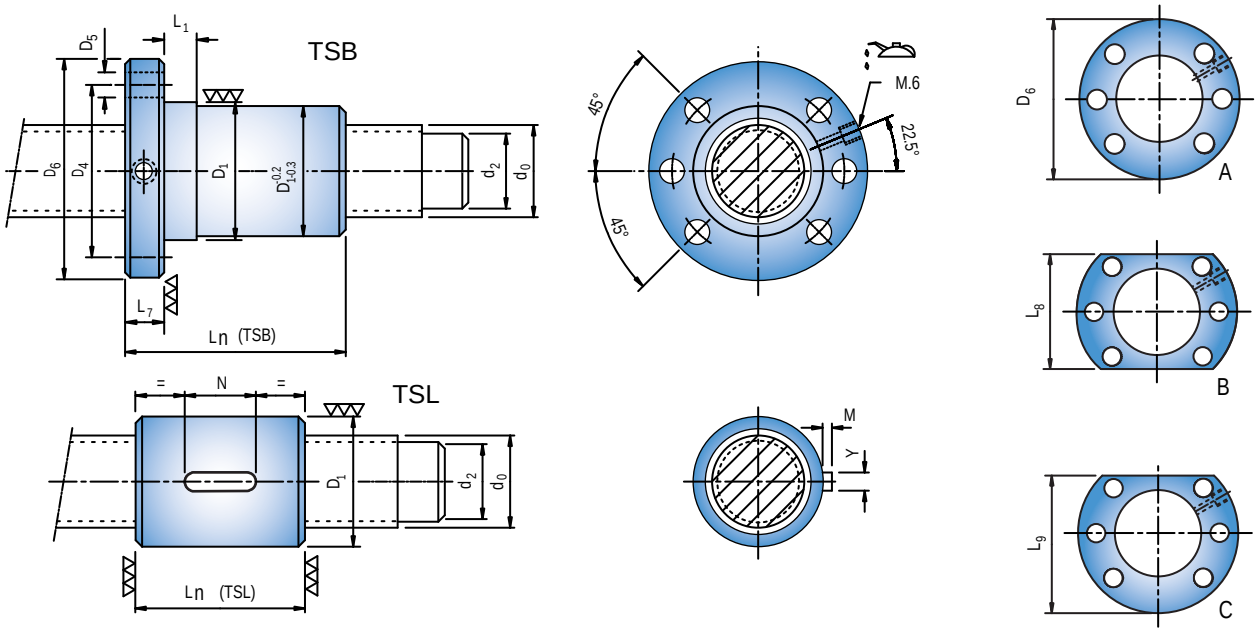

BOLD: DIN 69051/5 dimensions

Length of the nut L_n ±1mm TSB	TSL	D_1 g6	D_4 ± 0,2mm	D_6 h13	D_5 H13	L_7 h13	L_1 + 2mm 0	L_8 h13	L_9 h13	Code TSB TSL
45	41	**36**	**47**	**58**	**6,6**	**10**	**10**	**44**	**51**	TSx-S 2005-3-3
51	47									TSx-S 2005-3-4
56	52									TSx-S 2005-3-5
61	57									TSx-S 2005-3-6
46	42	**40**	**51**	**62**	**6,6**	**10**	**10**	**48**	**55**	TSx-S 2505-3-3
51	47									TSx-S 2505-3-4
56	52									TSx-S 2505-3-5
61	57									TSx-S 2505-3-6
55	53						16			TSx-S 2510-5-2
67	64									TSx-S 2510-5-3
79	76									TSx-S 2510-5-4
67		50	65	80	9	14		62	71	TSx-U 2520-5-2
48	42	**50**	**65**	**80**	**9**	**12**	**10**	**62**	**71**	TSx-S 3205-3-3
53	47									TSx-S 3205-3-4
58	52									TSx-S 3205-3-5
63	57									TSx-S 3205-3-6
79	75					14	16			TSx-S 3210-6-3
90	86									TSx-S 3210-6-4
101	97									TSx-S 3210-6-5
111	107									TSx-S 3210-6-6
68		**56**	**71**	**86**		**14**	**20**	**65**	**75,5**	TSx-U 3220-5-2
88										TSx-U 3220-5-3
76										TSx-U 3225-5-2

Key dimensions of the cylindrical nut: N, M, Y are obtained in the tables of page 4 of the catalogue.
It is advised to use the dimensions of the tables, although it is possible to manufacture ballscrew with other dimensions. Consult with SHUTON.
Smaller nut diameters than indicated in the tables can reduce the rigidity of the assembly between 5 and 10%.

SINGLE NUT WITH LOW PRELOAD AND WITHOUT PLAY

Steel Balls

TSB : Flanged Single Nut

TSL : Single Cylindrical Nut

Only exceptional cases.
It is advised diameter do:50

Code TSB TSL	Nominal diameter d_0	Lead P_h	Ball diameter D_w	Root diameter d_2	Circuits i	Dynamic load * C_a [N]	Static load * C_{oa} [N]	Rigidity of ball contact zone ** $R_{b/t}$ [N/µm]	Rigidity of nut *** R_{nu} [N/µm]
TSx-S 4005-3-3	40	5	3,175	37,8	3	16000	40300	700	590
TSx-S 4005-3-4					4	20200	53700	920	780
TSx-S 4005-3-5					5	24300	67200	1140	960
TSx-S 4005-3-6					6	28400	80600	1350	1140
TSx-S 4006-4-3		6	3,969	37,2	3	22600	52200	740	630
TSx-S 4006-4-4					4	28600	69600	970	830
TSx-S 4006-4-5					5	34400	87000	1200	1030
TSx-S 4006-4-6					6	40200	104400	1420	1220
TSx-S 4010-6-3		10	6,35	35,6	3	38800	72500	690	620
TSx-S 4010-6-4					4	49000	96700	900	820
TSx-S 4010-6-5					5	59100	120800	1120	1010
TSx-S 4010-6-6					6	68900	145000	1330	1200
TSx-S 4012-6-3		12			3	38700	72400	690	630
TSx-S 4012-6-4					4	48900	96500	900	830
TSx-S 4012-6-5					5	59000	120700	1110	1020
TSx-S 4012-6-6					6	68800	144800	1320	1220
TSx-S 4016-6-3		16			3	38600	72200	680	640
TSx-S 4016-6-4					4	48700	96200	900	840
TSx-S 4016-6-5					5	58700	120300	1110	1040
TSx-S 4020-6-2		20			2	29500	50700	490	470
TSx-S 4020-6-3					3	39900	76100	720	680
TSx-S 4020-6-4					4	50400	101500	940	890
TSx-U 4025-6-2		25			2	28700	49000	470	450
TSx-U 4025-6-3					3	40500	78400	710	680
TSx-U 4030-6-2		30			2	28500	48700	460	440
TSx-U 4030-6-3					3	41100	80600	720	700
TSx-U 4040-6-2		40			2	28800	50500	460	450
TSx-U 4020-8-2		20	7,938	33,3	2	42900	70100	610	590
TSx-U 4020-8-3					3	60400	111700	920	880
TSx-U 4020-8-4					4	78600	155800	1250	1200
TSx-U 4025-8-2		25			2	42600	69700	600	580
TSx-U 4025-8-3					3	60800	113500	930	900
TSx-U 4030-8-2		30			2	42200	69100	590	580

* Ca and Coa : Modified static and dynamic load capacities, calculated according to DIN 69051/4 standard and ISO3408/5. See 'Technical Description' pages 11-16.
** Rb/t : Rigidity of the balls contact zone for an external force 20% of Ca. See 'Technical Description' page 21. For different forces, multiply by $\sqrt[3]{F/0,2\,C_a}$
*** Rnu : Total rigidity of the complete nut. It must be multiplied by the factor 'far' which depends on the manufacturing tolerance. See 'Technical Description' page 23

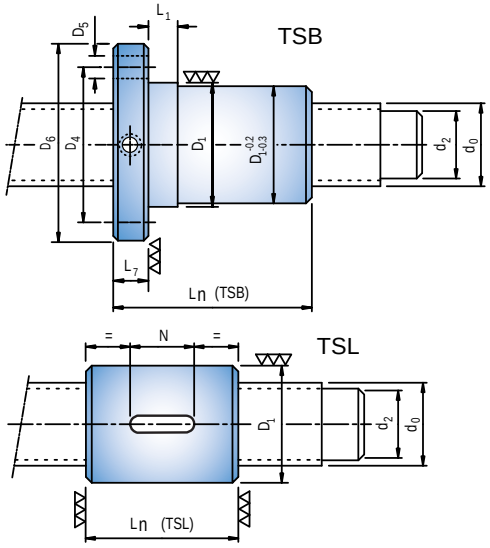

Only exceptional cases.
It is advised diameter do:50

BOLD: DIN 69051/5 dimensions

Length of the nut L_n ±1mm TSB	TSL	D_1 g6	D_4 ± 0,2mm	D_6 h13	D_5 H13	L_7 h13	L_1 + 2mm 0	L_8 h13	L_9 h13	Code TSB TSL
50	42									TSx-S 4005-3-3
55	47									TSx-S 4005-3-4
60	52									TSx-S 4005-3-5
65	57									TSx-S 4005-3-6
54	46						**10**			TSx-S 4006-4-3
61	53									TSx-S 4006-4-4
67	59									TSx-S 4006-4-5
73	65					**14**				TSx-S 4006-4-6
79	75									TSx-S 4010-6-3
90	86						16			TSx-S 4010-6-4
101	97	**63**								TSx-S 4010-6-5
111	107									TSx-S 4010-6-6
83	79		**78**	**93**				**70**	**81,5**	TSx-S 4012-6-3
96	92									TSx-S 4012-6-4
109	105									TSx-S 4012-6-5
121	117									TSx-S 4012-6-6
100	94				**9**					TSx-S 4016-6-3
117	111					16				TSx-S 4016-6-4
134	128						**20**			TSx-S 4016-6-5
89	81									TSx-S 4020-6-2
112	104									TSx-S 4020-6-3
136	128									TSx-S 4020-6-4
84		65								TSx-U 4025-6-2
109		D_1:**63** Consult with SHUTON								TSx-U 4025-6-3
93										TSx-U 4030-6-2
123		**70**	**85**	**100**		18	**25**	**75**	**87,5**	TSx-U 4030-6-3
110		(66)	(**78**)	(**93**)			(**20**)	(**70**)	(**81,5**)	TSx-U 4040-6-2
77										TSx-U 4020-8-2
97										TSx-U 4020-8-3
117		**70**	**85**	**100**			**25**	**75**	**87,5**	TSx-U 4020-8-4
85										TSx-U 4025-8-2
110										TSx-U 4025-8-3
96										TSx-U 4030-8-2

Key dimensions of the cylindrical nut: N, M, Y are obtained in the tables of page 4 of the catalogue.
The use of dimensions of the tables is advised. In brackets () the second option. It is possible to manufacture the nuts with different dimensioning. Consult with SHUTON.
Smaller nut diameters than the first option of the table can reduce the rigidity of the assembly between 5 and 10%.

SINGLE NUT WITH LOW PRELOAD AND WITHOUT PLAY Steel Balls

TSB : Flanged Single Nut

TSL : Single Cylindrical Nut

Code TSB TSL	Nominal diameter d_0	Lead P_h	Ball diameter D_w	Root diameter d_2	Circuits i	Dynamic load * C_a [N]	Static load * C_{oa} [N]	Rigidity of ball contact zone ** $R_{b/t}$ [N/µm]	Rigidity of nut *** R_{nu} [N/µm]
TSx-S 5005-3-3	50	5	3,175	47,8	3	17700	51500	860	690
TSx-S 5005-3-4					4	22300	68700	1120	900
TSx-S 5005-3-5					5	26900	85800	1380	1120
TSx-S 5005-3-6					6	31400	103000	1650	1330
TSx-S 5006-4-3		6	3,969	47,2	3	25200	67100	910	740
TSx-S 5006-4-4					4	31800	89500	1190	970
TSx-S 5006-4-5					5	38300	111900	1470	1200
TSx-S 5006-4-6					6	44700	134300	1750	1430
TSx-S 5010-6-3		10	6,35	45,6	3	44300	95100	870	760
TSx-S 5010-6-4					4	56000	126800	1140	990
TSx-S 5010-6-5					5	67500	158500	1400	1230
TSx-S 5010-6-6					6	78700	190100	1670	1460
TSx-S 5012-8-3		12	7,938	44,6	3	59900	118000	880	770
TSx-S 5012-8-4					4	75700	157400	1150	1010
TSx-S 5012-8-5					5	91300	196700	1420	1250
TSx-S 5012-8-6					6	106500	236000	1690	1490
TSx-S 5015-8-3		15			3	59800	117800	870	790
TSx-S 5015-8-4					4	75600	157100	1150	1040
TSx-S 5015-8-5					5	91100	196400	1410	1280
TSx-S 5015-8-6					6	106300	235700	1680	1520
TSx-S 5016-8-3		16			3	59800	117800	870	790
TSx-S 5016-8-4					4	75500	157000	1140	1040
TSx-S 5016-8-5					5	91100	196300	1410	1290
TSx-S 5016-8-6					6	106200	235600	1680	1530
TSx-S 5020-8-3		20			3	61900	124400	920	840
TSx-S 5020-8-4					4	78200	165800	1200	1110
TSx-S 5020-8-5					5	94300	207300	1480	1370
TSx-U 5025-6-2		25	6,35	45,6	2	32900	64200	590	560
TSx-U 5025-6-3					3	45500	99900	870	820
TSx-U 5025-6-4					4	58600	137000	1160	1100
TSx-U 5030-6-2		30			2	32700	63900	580	560
TSx-U 5030-6-3					3	45600	100800	870	830
TSx-U 5040-6-2		40			2	32600	64500	580	560
TSx-U 5040-6-3					3	45700	102300	870	840
TSx-U 5050-6-2		50			2	32400	64900	570	560
TSx-U 5025-8-2		25	7,938	43,3	2	49300	92200	750	720
TSx-U 5025-8-3					3	68700	144900	1130	1090
TSx-U 5025-8-4					4	88900	200300	1530	1470
TSx-U 5030-8-2		30			2	49000	91800	740	720
TSx-U 5030-8-3					3	69100	146800	1140	1100
TSx-U 5040-8-2		40			2	49100	93200	740	730
TSx-U 5040-8-3				44,6	3	61700	126300	880	860
TSx-U 5050-8-2		50			2	43700	80000	570	560

* Ca and Coa : Modified static and dynamic load capacities, calculated according to DIN 69051/4 standard and ISO3408/5. See 'Technical Description' pages 11-16.

** Rb/t : Rigidity of the balls contact zone for an external force 20% of Ca. See 'Technical Description' page 21. For different forces, multiply by $\sqrt[3]{F/0,2\,C_a}$

*** Rnu : Total rigidity of the complete nut. It must be multiplied by the factor 'far' which depends on the manufacturing tolerance. See 'Technical Description' page 23

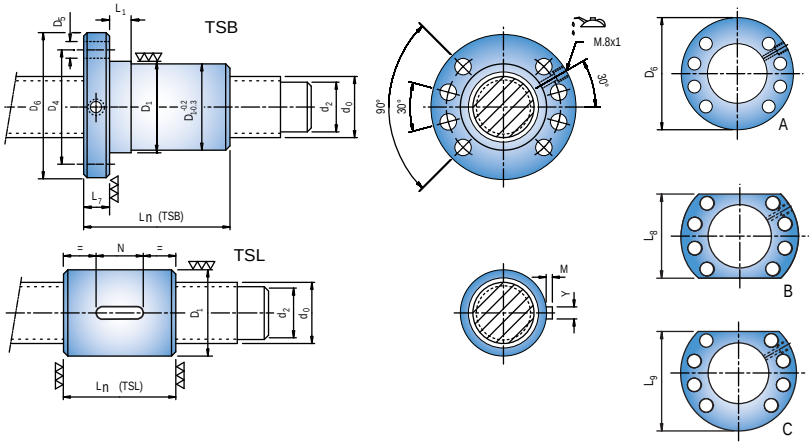

BOLD: DIN 69051/5 dimensions

Length of the nut L_n ±1mm TSB	Length of the nut L_n ±1mm TSL	D_1 g6	D_4 ± 0,2mm	D_6 h13	D_5 H13	L_7 h13	L_1 + 2mm 0	L_8 h13	L_9 h13	Code TSB TSL
52	42									TSx-S 5005-3-3
57	47									TSx-S 5005-3-4
62	52									TSx-S 5005-3-5
67	57						**10**			TSx-S 5005-3-6
56	46									TSx-S 5006-4-3
63	53									TSx-S 5006-4-4
69	59									TSx-S 5006-4-5
75	65									TSx-S 5006-4-6
82	76									TSx-S 5010-6-3
92	86						16			TSx-S 5010-6-4
103	97									TSx-S 5010-6-5
113	107					**16**				TSx-S 5010-6-6
92	88									TSx-S 5012-8-3
105	101	**75**								TSx-S 5012-8-4
117	113									TSx-S 5012-8-5
130	126									TSx-S 5012-8-6
104	100									TSx-S 5015-8-3
120	116		**93**	**110**				**85**	**97,5**	TSx-S 5015-8-4
136	132									TSx-S 5015-8-5
152	148						**20**			TSx-S 5015-8-6
104	100									TSx-S 5016-8-3
122	118				**11**					TSx-S 5016-8-4
138	134									TSx-S 5016-8-5
155	151									TSx-S 5016-8-6
122	116									TSx-S 5020-8-3
143	137									TSx-S 5020-8-4
164	158									TSx-S 5020-8-5
85										TSx-U 5025-6-2
110										TSx-U 5025-6-3
135										TSx-U 5025-6-4
94		76					25			TSx-U 5030-6-2
124										TSx-U 5030-6-3
112										TSx-U 5040-6-2
152						18				TSx-U 5040-6-3
129										TSx-U 5050-6-2
87										TSx-U 5025-8-2
112										TSx-U 5025-8-3
137										TSx-U 5025-8-4
96		**82**	**100**	**118**			**25**	**92**	**105**	TSx-U 5030-8-2
126										TSx-U 5030-8-3
116										TSx-U 5040-8-2
156										TSx-U 5040-8-3
133										TSx-U 5050-8-2

Key dimensions of the cylindrical nut: N, M, Y are obtained in the tables of page 4 of the catalogue.
It is advised to use the dimensions of the tables, although it is possible to manufacture ballscrew with other dimensions. Consult with SHUTON.
Smaller nut diameters than indicated in the tables can reduce the rigidity of the assembly between 5 and 10%.

SINGLE NUT WITH LOW PRELOAD AND WITHOUT PLAY Steel Balls

TSB : Flanged Single Nut

TSL : Single Cylindrical Nut

Code TSB TSL	Nominal diameter d_0	Lead P_h	Ball diameter D_w	Root diameter d_2	Circuits i	Dynamic load * C_a [N]	Static load * C_{oa} [N]	Rigidity of ball contact zone ** $R_{b/t}$ [N/µm]	Rigidity of nut *** R_{nu} [N/µm]
TSx-S 6305-3-3	63	5	3,175	60,8	3	19500	66100	1040	790
TSx-S 6305-3-4					4	24700	88100	1370	1040
TSx-S 6305-3-5					5	29700	110200	1690	1280
TSx-S 6305-3-6					6	34700	132200	2010	1530
TSx-S 6310-6-3		10	6,35	58,6	3	49500	122300	1070	890
TSx-S 6310-6-4					4	62500	163100	1390	1170
TSx-S 6310-6-5					5	75400	203900	1720	1450
TSx-S 6310-6-6					6	88000	244600	2050	1730
TSx-S 6312-8-3		12	7,938	57,6	3	70400	161900	1150	990
TSx-S 6312-8-4					4	88900	215800	1500	1300
TSx-S 6312-8-5					5	107200	269800	1850	1610
TSx-S 6312-8-6					6	125100	323700	2210	1910
TSx-S 6316-8-3		16			3	70300	161700	1140	1020
TSx-S 6316-8-4					4	88800	215500	1500	1340
TSx-S 6316-8-5					5	107000	269400	1850	1660
TSx-S 6316-8-6					6	124900	323300	2200	1970
TSx-S 6320-9-3		20	9,525	56,5	3	86100	181700	1100	1000
TSx-S 6320-9-4					4	108800	242200	1440	1320
TSx-S 6320-9-5					5	131100	302800	1780	1630
TSx-S 6320-9-6					6	153000	363300	2120	1940
TSx-U 6325-8-3		25	7,938	56,3	3	78200	190100	1420	1340
TSx-U 6325-8-4					4	99700	257100	1870	1770
TSx-U 6325-8-5					5	121500	326700	2300	2180
TSx-U 6330-8-2		30			2	55700	120100	940	900
TSx-U 6330-8-3					3	77800	189500	1410	1340
TSx-U 6330-8-4					4	100000	258900	1870	1790
TSx-U 6340-8-2		40			2	56000	121800	950	910
TSx-U 6340-8-3					3	77700	190600	1400	1350
TSx-U 6350-8-2		50			2	55200	120500	920	900
TSx-U 6325-9-3		25	9,525	55,2	3	99800	225600	1440	1370
TSx-U 6325-9-4					4	129000	311200	1930	1830
TSx-U 6325-9-5					5	157600	396800	2410	2290
TSx-U 6330-9-2		30			2	71500	143500	950	920
TSx-U 6330-9-3					3	100600	228800	1460	1400
TSx-U 6330-9-4					4	128500	310200	1910	1840
TSx-U 6340-9-2		40			2	70700	142300	940	910
TSx-U 6340-9-3					3	99500	226900	1430	1390
TSx-U 6350-9-2		50			2	71000	144700	940	920
TSx-U 6350-9-3					3	99300	228400	1420	1390

* Ca and Coa : Modified static and dynamic load capacities, calculated according to DIN 69051/4 standard and ISO3408/5. See 'Technical Description' pages 11-16.

** Rb/t : Rigidity of the balls contact zone for an external force 20% of Ca. See 'Technical Description' page 21. For different forces, multiply by $\sqrt[3]{F/0,2\,C_a}$

*** Rnu : Total rigidity of the complete nut. It must be multiplied by the factor 'far' which depends on the manufacturing tolerance. See 'Technical Description' page 23

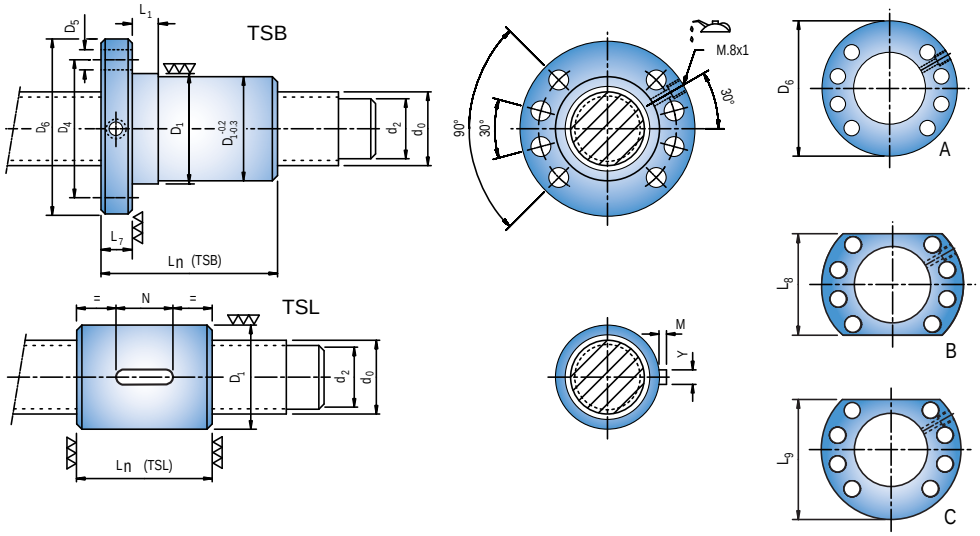

BOLD: DIN 69051/5 dimensions

Length of the nut L_n ±1mm TSB	Length of the nut L_n ±1mm TSL	D_1 g6	D_4 ± 0,2mm	D_6 h13	D_5 H13	L_7 h13	L_1 + 2mm 0	L_8 h13	L_9 h13	Code TSB TSL
54	42	**90**	**108**	**125**	**11**	**18**	16	**95**	**110**	TSx-S 6305-3-3
59	47									TSx-S 6305-3-4
64	52									TSx-S 6305-3-5
70	58									TSx-S 6305-3-6
84	76									TSx-S 6310-6-3
95	87									TSx-S 6310-6-4
105	97									TSx-S 6310-6-5
115	107									TSx-S 6310-6-6
96	88	**95** (90)	**115** (108)	**135** (125)	**13,5** (11)	**20**	**25**	**100** (95)	**117,5** (110)	TSx-S 6312-8-3
109	101									TSx-S 6312-8-4
121	113									TSx-S 6312-8-5
134	126									TSx-S 6312-8-6
109	101									TSx-S 6316-8-3
126	118									TSx-S 6316-8-4
143	135									TSx-S 6316-8-5
159	151									TSx-S 6316-8-6
127	121	**95**	**115**	**135**	**13,5**			**100**	**117,5**	TSx-S 6320-9-3
149	142									TSx-S 6320-9-4
170	163									TSx-S 6320-9-5
191	184									TSx-S 6320-9-6
114										TSx-U 6325-8-3
139										TSx-U 6325-8-4
164										TSx-U 6325-8-5
97										TSx-U 6330-8-2
127										TSx-U 6330-8-3
157										TSx-U 6330-8-4
115										TSx-U 6340-8-2
155										TSx-U 6340-8-3
135										TSx-U 6350-8-2
120		**105**	**125**	**145**	**13,5**			**110**	**127,5**	TSx-U 6325-9-3
145										TSx-U 6325-9-4
170										TSx-U 6325-9-5
104										TSx-U 6330-9-2
134										TSx-U 6330-9-3
164										TSx-U 6330-9-4
120										TSx-U 6340-9-2
160										TSx-U 6340-9-3
137										TSx-U 6350-9-2
187										TSx-U 6350-9-3

Key dimensions of the cylindrical nut: N, M, Y are obtained in the tables of page 4 of the catalogue.
The use of dimensions of the tables is advised. In brackets () the second option. It is possible to manufacture the nuts with different dimensioning. Consult with SHUTON.
Smaller nut diameters than the first option of the table can reduce the rigidity of the assembly between 5 and 10%.

SINGLE NUT WITH LOW PRELOAD AND WITHOUT PLAY Steel Balls

TSB : Flanged Single Nut

TSL : Single Cylindrical Nut

Code TSB TSL	Nominal diameter d_0	Lead P_h	Ball diameter D_w	Root diameter d_2	Circuits i	Dynamic load * C_a [N]	Static load * C_{oa} [N]	Rigidity of ball contact zone ** $R_{b/t}$ [N/µm]	Rigidity of nut *** R_{nu} [N/µm]
TSx-S 8010-6-3	80	10	6,35	75,6	3	56200	163100	1350	1030
TSx-S 8010-6-4					4	71100	217400	1770	1360
TSx-S 8010-6-5					5	85600	271800	2180	1680
TSx-S 8010-6-6					6	99900	326100	2590	2000
TSx-S 8012-8-3		12	7,938	74,6	3	78000	206400	1400	1190
TSx-S 8012-8-4					4	98500	275100	1830	1570
TSx-S 8012-8-5					5	118800	343900	2260	1940
TSx-S 8012-8-6					6	138600	412700	2680	2310
TSx-S 8016-8-3		16			3	77900	206200	1390	1240
TSx-S 8016-8-4					4	98400	274900	1820	1620
TSx-S 8016-8-5					5	118600	343600	2250	2010
TSx-S 8016-8-6					6	138400	412400	2680	2390
TSx-S 8020-12-3		20	12,7	71,4	3	140200	303700	1370	1230
TSx-S 8020-12-4					4	177200	404900	1790	1610
TSx-S 8020-12-5					5	213600	506200	2210	1990
TSx-S 8020-12-6					6	249200	607400	2630	2370
TSx-U 8025-9-3		25	9,525	72,2	3	113100	296000	1800	1690
TSx-U 8025-9-4					4	144800	402500	2370	2220
TSx-U 8025-9-5					5	175900	509100	2930	2750
TSx-U 8025-9-6					6	207200	619600	3480	3270
TSx-U 8030-9-3		30			3	112800	295400	1790	1700
TSx-U 8030-9-4					4	144400	401700	2360	2230
TSx-U 8030-9-5					5	176400	512000	2940	2790
TSx-U 8040-9-2		40			2	80800	188100	1180	1130
TSx-U 8040-9-3					3	113000	297800	1800	1720
TSx-U 8040-9-4					4	144400	403600	2350	2260
TSx-U 8050-9-2		50			2	81200	190700	1180	1150
TSx-U 8050-9-3					3	112100	295800	1770	1710
TSx-U 8025-12-3		25	12,7	71	3	169400	403500	1960	1850
TSx-U 8025-12-4					4	218600	554800	2610	2460
TSx-U 8025-12-5					5	266600	706100	3250	3070
TSx-U 8025-12-6					6	313600	857500	3860	3650
TSx-U 8030-12-3		30			3	169000	402700	1950	1860
TSx-U 8030-12-4					4	218000	553700	2600	2470
TSx-U 8030-12-5					5	265900	704800	3240	3080
TSx-U 8040-12-2		40			2	121400	257600	1300	1250
TSx-U 8040-12-3					3	169900	407900	1960	1890
TSx-U 8040-12-4					4	218500	558200	2600	2510
TSx-U 8050-12-2		50			2	120400	256000	1280	1240
TSx-U 8050-12-3					3	168600	405300	1940	1880

* Ca and Coa : Modified static and dynamic load capacities, calculated according to DIN 69051/4 standard and ISO3408/5. See 'Technical Description' pages 11-16.

** Rb/t : Rigidity of the balls contact zone for an external force 20% of Ca. See 'Technical Description' page 21. For different forces, multiply by $\sqrt[3]{F/0,2\,C_a}$

*** Rnu : Total rigidity of the complete nut. It must be multiplied by the factor 'far' which depends on the manufacturing tolerance. See 'Technical Description' page 23

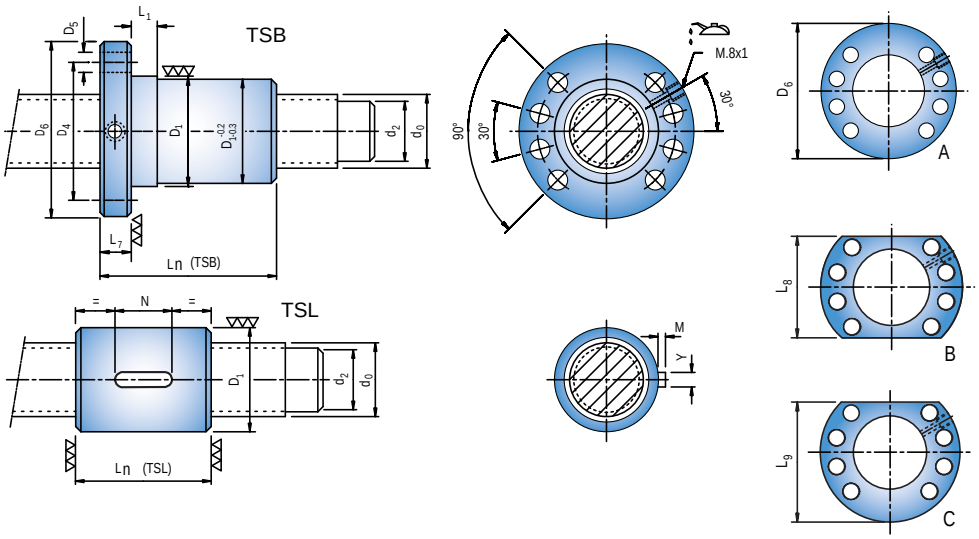

BOLD: DIN 69051/5 dimensions

Length of the nut L_n ±1mm TSB	TSL	D_1 g6	D_4 ± 0,2mm	D_6 h13	D_5 H13	L_7 h13	L_1 + 2mm 0	L_8 h13	L_9 h13	Code TSB TSL
86	76	**105**	**125**	**145**	13,5	**20**	16	**110**	**127,5**	TSx-S 8010-6-3
97	87									TSx-S 8010-6-4
107	97									TSx-S 8010-6-5
118	108									TSx-S 8010-6-6
101	88	**125** (105)	**145** (125)	**165** (145)		25	25	**130** (110)	**147,5** (127,5)	TSx-S 8012-8-3
114	101									TSx-S 8012-8-4
127	114									TSx-S 8012-8-5
139	126									TSx-S 8012-8-6
114	101									TSx-S 8016-8-3
131	118									TSx-S 8016-8-4
148	135									TSx-S 8016-8-5
164	151									TSx-S 8016-8-6
143	134	**125**	**145**	**165**				**130**	**147,5**	TSx-S 8020-12-3
165	156									TSx-S 8020-12-4
186	177									TSx-S 8020-12-5
207	198									TSx-S 8020-12-6
122										TSx-U 8025-9-3
147										TSx-U 8025-9-4
172										TSx-U 8025-9-5
197										TSx-U 8025-9-6
136										TSx-U 8030-9-3
166										TSx-U 8030-9-4
196										TSx-U 8030-9-5
123										TSx-U 8040-9-2
163										TSx-U 8040-9-3
203										TSx-U 8040-9-4
140										TSx-U 8050-9-2
190										TSx-U 8050-9-3
131		**135**	**155**	**175**				**140**	**157,5**	TSx-U 8025-12-3
156										TSx-U 8025-12-4
181										TSx-U 8025-12-5
206										TSx-U 8025-12-6
145										TSx-U 8030-12-3
175										TSx-U 8030-12-4
205										TSx-U 8030-12-5
132										TSx-U 8040-12-2
172										TSx-U 8040-12-3
212										TSx-U 8040-12-4
148										TSx-U 8050-12-2
198										TSx-U 8050-12-3

Key dimensions of the cylindrical nut: N, M, Y are obtained in the tables of page 4 of the catalogue.
The use of dimensions of the tables is advised. In brackets () the second option. It is possible to manufacture the nuts with different dimensioning. Consult with SHUTON.
Smaller nut diameters than the first option of the table can reduce the rigidity of the assembly between 5 and 10%.

SINGLE NUT WITH LOW PRELOAD AND WITHOUT PLAY

Steel Balls

TSB : Flanged Single Nut

TSL : Single Cylindrical Nut

Code TSB TSL	Nominal diameter d_0	Lead P_h	Ball diameter D_w	Root diameter d_2	Circuits i	Dynamic load C_a [N] *	Static load C_{oa} [N] *	Rigidity of ball contact zone $R_{b/t}$ [N/µm] **	Rigidity of nut R_{nu} [N/µm] ***
TSx-S 10010-6-3	100	10	6,35	95,6	3	61300	204000	1610	1130
TSx-S 10010-6-4					4	77500	272000	2110	1480
TSx-S 10010-6-5					5	93400	340000	2600	1840
TSx-S 10010-6-6					6	109000	408000	3100	2190
TSx-S 10012-8-3		12	7,938	94,6	3	86900	265400	1710	1410
TSx-S 10012-8-4					4	109800	353900	2240	1850
TSx-S 10012-8-5					5	132300	442300	2770	2290
TSx-S 10012-8-6					6	154400	530800	3290	2730
TSx-S 10016-8-3		16			3	86800	265300	1710	1470
TSx-S 10016-8-4					4	109700	353700	2240	1930
TSx-S 10016-8-5					5	132200	442100	2760	2390
TSx-S 10016-8-6					6	154300	530500	3290	2850
TSx-S 10020-12-3		20	12,7	91	3	160100	398300	1710	1500
TSx-S 10020-12-4					4	202300	531000	2240	1960
TSx-S 10020-12-5					5	243800	663800	2770	2430
TSx-S 10020-12-6					6	284500	796600	3290	2890
TSx-U 10025-12-3		25			3	190000	517900	2400	2200
TSx-U 10025-12-4					4	244000	707600	3190	2930
TSx-U 10025-12-5					5	296900	897200	3930	3610
TSx-U 10025-12-6					6	347100	1079600	4630	4260
TSx-U 10030-12-2		30			2	135800	327800	1600	1490
TSx-U 10030-12-3					3	189700	517200	2390	2220
TSx-U 10030-12-4					4	243600	706700	3180	2960
TSx-U 10030-12-5					5	296400	896100	3920	3650
TSx-U 10040-12-2		40			2	135200	326800	1590	1500
TSx-U 10040-12-3					3	188900	515600	2370	2250
TSx-U 10040-12-4					4	242600	704400	3160	2990
TSx-U 10050-12-2		50			2	136500	332700	1610	1540
TSx-U 10050-12-3					3	189600	520700	2380	2280

* Ca and Coa : Modified static and dynamic load capacities, calculated according to DIN 69051/4 standard and ISO3408/5. See 'Technical Description' pages 11-16.

** Rb/t : Rigidity of the balls contact zone for an external force 20% of Ca. See 'Technical Description' page 21. For different forces, multiply by $\sqrt[3]{F/0,2\ C_a}$

*** Rnu : Total rigidity of the complete nut. It must be multiplied by the factor 'far' which depends on the manufacturing tolerance. See 'Technical Description' page 23

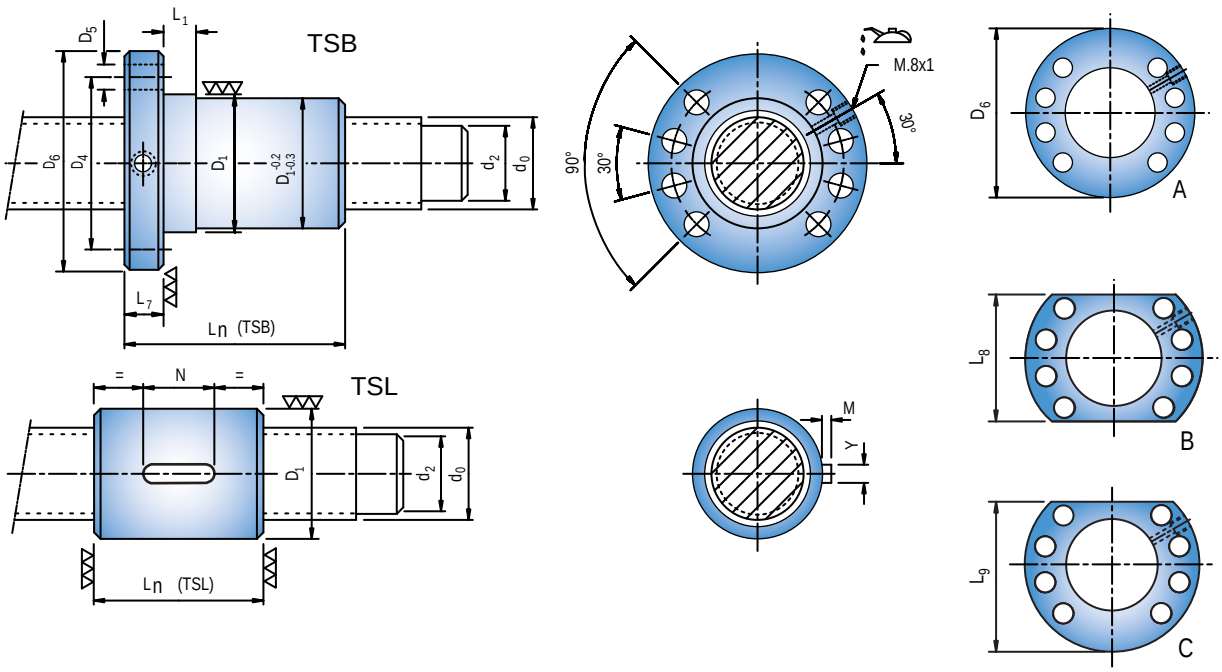

BOLD: DIN 69051/5 dimensions

Length of the nut L_n ±1mm TSB	TSL	D_1 g6	D_4 ± 0,2mm	D_6 h13	D_5 H13	L_7 h13	L_1 + 2mm 0	L_8 h13	L_9 h13	Code TSB TSL
88	76	**125**	**145**	**165**	**13,5**	**22**	16	**130**	**147,5**	TSx-S 10010-6-3
99	87									TSx-S 10010-6-4
109	97									TSx-S 10010-6-5
120	108									TSx-S 10010-6-6
106	88	**150** (125)	**176** (145)	**202** (165)	**17,5** (13,5)	**30**	**25**	**155** (130)	**178,5** (147,5)	TSx-S 10012-8-3
119	101									TSx-S 10012-8-4
132	114									TSx-S 10012-8-5
144	126									TSx-S 10012-8-6
119	101									TSx-S 10016-8-3
136	118									TSx-S 10016-8-4
153	135									TSx-S 10016-8-5
169	151									TSx-S 10016-8-6
148	134	**150**	**176**	**202**	**17,5**			**155**	**178,5**	TSx-S 10020-12-3
170	156									TSx-S 10020-12-4
191	177									TSx-S 10020-12-5
212	198									TSx-S 10020-12-6
133										TSx-U 10025-12-3
158										TSx-U 10025-12-4
183										TSx-U 10025-12-5
208										TSx-U 10025-12-6
117										TSx-U 10030-12-2
147										TSx-U 10030-12-3
177										TSx-U 10030-12-4
207										TSx-U 10030-12-5
134										TSx-U 10040-12-2
174										TSx-U 10040-12-3
214										TSx-U 10040-12-4
151										TSx-U 10050-12-2
201										TSx-U 10050-12-3

Key dimensions of the cylindrical nut: N, M, Y are obtained in the tables of page 4 of the catalogue.
The use of dimensions of the tables is advised. In brackets () the second option. It is possible to manufacture the nuts with different dimensioning. Consult with SHUTON.
Smaller nut diameters than the first option of the table can reduce the rigidity of the assembly between 5 and 10%.

SUMMARY TABLE OF STATIC AND DYNAMIC LOAD CAPACITIES

Internal 'S' & External 'U' Recirculation - Steel Balls - Preloaded Nut

Nominal diameter & Recirc.	Lead	Ball diameter	Dynamic load according to circuits quantity i C_a [N]					Static load according to circuits quantity i C_{oa} [N]				
d_0	P_h	D_w	2	3	4	5	6	2	3	4	5	6
20 - S	5	3,175	8800	12000	15300	18500		13400	20400	27600	35100	
25 - S	5	3,175	10000	13600	17300	21000		17500	26700	36200	45900	
	10	4,762	16000	21700	27400			23300	34900	46500		
25 - U	20	4,762	16400					24400				
32 - S	5	3,175	11300	15500	19700	23900		23400	35600	48200	61100	
	10	6,35	28900	39000	49300	59400		42500	63800	85000	106300	
32 - U	20	4,762	19000	26400				32600	51000			
	25		18800					32300				
40 - S	5	3,175	12600	17200	21900	26500	31200	30000	45700	61900	78500	95500
	6	3,969	17800	24200	30800	37400	44000	38600	58800	79500	100700	122400
	10	6,35	33800	45700	57700	69600		56500	84800	113000	141300	
	12		30100	40900	51900	63000		51900	78700	105900	133500	
	16		28600	38600	48700	58700		48100	72200	96200	120300	
	20		29500	39900	50400			50700	76100	101500		
40 - U	10	6,35	33800	48000	61600	74900		56500	91400	124700	157900	
	12		33800	48000	61500	74800		56400	91300	124500	157700	
	15		33700	47800	61300	75100		56300	91100	124200	159000	
	16		33600	47700	61200	75000		56300	91000	124100	158800	
	20		34100	47500	61400			57700	90600	125200		
	25		33800	47700				57300	91700			
	30		33500	41100				56800	80600			
	40		28800					50500				
	20	7,938	45800	64300	83800			72900	116100	162000		
	25		45400	64800				72400	118100			
	30		44900					71900				
50 - S	5	3,175	13900	19000	24200	29300	34400	38400	58400	79100	100300	122000
	6	3,969	19800	26900	34300	41600	48900	49600	75500	102100	129400	157300
	10	6,35	38900	52600	66400	80000	93400	74100	111100	148200	185200	222200
	12	7,938	46300	62900	79900	96700		83900	127000	170700	215100	
	15		46200	62800	79700	96500		83800	126800	170500	214800	
	16		46200	62700	79600	96500		83800	126700	170400	214700	
	20		45800	61900	78200	94300		82900	124400	165800	207300	
50 - U	10	6,35	38900	54100	69900	84800	99400	74100	116200	159900	202000	244100
	20		38600	54200	69400	84600		73600	117200	159000	202500	
	25		39000	53900	69500			75000	116700	160000		
	30		38700	54100				74600	117700			
	40		38600	45700				75300	102300			
	50		32400					64900				
	15	7,938	52500	74600	95700	117100		93800	151700	206900	264800	
	16		52500	74500	95600	117000		93700	151600	206800	264700	
	20		53300	74300	96100	116600		96200	151200	209000	263900	
	25		53000	73900	95600			95800	150600	208100		
	30		52700	74200				95300	152500			
	40		52800	67900				96800	144900			
	50		48100					91700				

Nominal diameter & Recirc.	Lead	Ball diameter	Dynamic load according to circuits quantity i C_a [N]					Static load according to circuits quantity i C_{oa} [N]				
d_0	P_h	D_w	2	3	4	5	6	2	3	4	5	6
63 - S	5	3,175	15400	21000	26700	32400	38000	49200	74900	101400	128600	156400
	10	6,35	43800	59200	74800	90100	105200	95300	142900	190500	238100	285800
	12	7,938	54300	73600	93500	113200	132700	115100	174000	233900	294800	356500
63 - U	10	6,35	44400	61500	78300	95200	111800	97000	151400	204100	258500	313000
	12	7,938	61200	84700	109000	132200	155500	125900	195800	268500	338500	411200
	15		61100	84600	108900	132700	155300	125700	195600	268300	340900	410800
	16		61100	84500	108900	132700	155200	125700	195500	268200	340800	410600
	20		61000	84400	108600	132400	154900	125500	195200	267700	340200	409900
	25		60800	84900	108200	131900		125100	197400	267000	339300	
	30		60500	84500	108500			124700	196800	268900		
	40		60700	84400				126500	197900			
	50		59900					125100				
	20	9,525	77200	107400	138800	168400	198500	149100	233700	322400	407000	495700
	25		77000	107000	138400	169000		148700	233100	321500	409900	
	30		76700	107800	137800			148200	236400	320500		
	40		75800	106700				147000	234400			
	50		76200	106500				149500	236000			
80 - S	10	6,35	50200	67800	85600	103200	120400	126900	190400	253800	317300	380700
80 - U	12	7,938	69300	95700	122900	148900	174400	163800	254200	347500	437900	528300
	15		69200	95600	122800	148800	174300	163700	254100	347300	437600	527900
	16		69200	95600	122800	148800	174200	163700	254000	347200	437500	527800
	20	9,525	88500	122700	157200	190900	223900	195900	306200	416400	526600	636800
	25		88300	122500	156800	190500	224400	195600	305600	415700	525700	639800
	30		88000	122200	156400	191000		195200	305000	414800	528700	
	40		87400	122400	156400			194200	307500	416700		
	50		87900	121400				197000	305500			
	20	12,7	128200	180700	233100	284300	334400	258300	413300	568400	723400	878400
	25		127900	180300	232600	283700	333700	257900	412700	567400	722200	877000
	30		127600	179900	232000	283000		257400	411900	566300	720800	
	40		129200	180800	232500			263500	417200	570900		
	50		128100	179400				261800	414600			
100 - S	10	6,35	55100	74400	94000	113300	132200	158700	238100	317400	396800	476200
100 - U	12	7,938	77600	106700	136000	165300	193500	210500	324400	438200	554800	668600
	15		77600	106600	135900	165200	193400	210500	324200	438000	554600	668400
	16		77600	106600	135900	165200	193300	210400	324200	437900	554500	668300
	20	9,525	99400	137600	175100	212800	249600	251300	391400	527400	667500	807500
	25		99200	137400	174800	212500	249300	251100	391000	526800	666700	806700
	30		99100	137200	175400	212100		250700	390500	530200	665800	
	40		98600	136600	174700			249900	389200	528400		
	50		99100	136700				252900	391600			
	20	12,7	146300	204300	262400	317500	373200	336000	530100	724200	910800	1104900
	25		146100	204000	262000	318800	372700	335600	529500	723400	917300	1103800
	30		145800	203700	261600	318300		335200	528800	722500	916200	
	40		145200	202800	260500			334100	527100	720200		
	50		146600	203600				340100	532300			
120 - U	20	12,7	161500	224200	285500	347300	407700	413700	646900	872500	1105700	1338900
	25		161300	224000	285200	346900	407300	413400	646400	871900	1104900	1337900
	30		161200	223700	286500	346500		413000	645800	878600	1103900	
	40		160700	223100	285700			412100	644300	876600		
	50		160100	222200				410900	642500			

SUMMARY TABLE OF NUT RIGIDITIES

Internal 'S' & External 'U' Recirculation - Steel Balls - Preloaded Nut

Nominal diameter & Recirc.	Lead	Ball diameter	Rigidity ball contact zone according circuits quantity i $R_{b/t,pr}$ [N/µm]					Rigidity of nut according to circuits quantity i $R_{nut,pr}$ [N/µm]				
d_0	P_h	D_w	2	3	4	5	6	2	3	4	5	6
20 - S	5	3,175	460	680	920	1160		430	650	870	1110	
25 - S	5	3,175	570	850	1150	1450		530	790	1070	1360	
	10	4,762	470	690	900			450	650	850		
25 - U	20	4,762	480					470				
32 - S	5	3,175	720	1080	1450	1840		660	990	1330	1690	
	10	6,35	830	1200	1570	1940		790	1150	1500	1850	
32 - U	20	4,762	610	920				590	890			
	25		600					590				
40 - S	5	3,175	890	1320	1780	2250	2750	790	1190	1610	2050	2510
	6	3,969	920	1370	1840	2330	2840	830	1240	1680	2130	2610
	10	6,35	1040	1610	2010	2490		1000	1450	1910	2360	
	12		810	1200	1590	2000		760	1130	1510	1900	
	16		710	1020	1340	1660		670	970	1280	1580	
	20		740	1070	1400			710	1030	1350		
40 - U	10	6,35	1040	1610	2140	2630		980	1520	2020	2490	
	12		1040	1600	2140	2630		990	1530	2040	2500	
	15		1030	1590	2130	2640		1000	1540	2050	2550	
	16		1030	1590	2120	2640		1000	1540	2050	2550	
	20		1050	1580	2130			1020	1530	2070		
	25		1030	1580				1010	1550			
	30		1020	1080				1000	1060			
	40		690					680				
	20	7,938	1140	1720	2340			1120	1680	2280		
	25		1130	1740				1110	1710			
	30		1110					1090				
50 - S	5	3,175	1080	1610	2170	2740	3340	940	1410	1910	2430	2980
	6	3,969	1130	1680	2260	2860	3480	990	1480	2000	2550	3120
	10	6,35	1340	1940	2540	3130	3720	1240	1800	2360	2910	3470
	12	7,938	1020	1500	1990	2500		930	1380	1840	2300	
	15		1020	1490	1990	2490		950	1400	1860	2330	
	16		1020	1490	1980	2490		950	1400	1860	2340	
	20		950	1370	1800	2220		890	1290	1690	2090	
50 - U	10	6,35	1310	1950	2620	3230	3800	1220	1810	2430	3000	3530
	20		1300	1960	2590	3220		1250	1880	2490	3100	
	25		1320	1940	2590			1280	1880	2510		
	30		1300	1950				1270	1900			
	40		1290	1310				1270	1270			
	50		860					840				
	15	7,938	1400	2160	2890	3580		1350	2080	2770	3440	
	16		1400	2160	2880	3580		1350	2080	2780	3450	
	20		1430	2150	2900	3560		1390	2090	2820	3450	
	25		1420	2130	2880			1380	2080	2810		
	30		1400	2140				1370	2100			
	40		1400	1660				1380	1630			
	50		1080					1060				

Nominal diameter & Recirc.	Lead	Ball diameter	Rigidity ball contact zone according circuits quantity i $R_{b/t,pr}$ [N/µm]					Rigidity of nut according to circuits quantity i $R_{nut,pr}$ [N/µm]				
d_0	P_h	D_w	2	3	4	5	6	2	3	4	5	6
63 - S	5	3,175	1320	1970	2650	3350	4080	1100	1650	2240	2860	3510
	10	6,35	1650	2380	3120	3860	4590	1490	2160	2840	3510	4180
	12	7,938	1330	1960	2600	3260	3930	1200	1770	2360	2970	3580
63 - U	10	6,35	1630	2440	3170	3930	4660	1480	2210	2880	3570	4240
	12	7,938	1810	2670	3570	4370	5200	1690	2490	3330	4080	4860
	15		1810	2670	3560	4390	5190	1710	2520	3370	4160	4910
	16		1810	2670	3560	4390	5180	1710	2530	3380	4170	4920
	20		1800	2660	3550	4380	5160	1730	2550	3400	4200	4960
	25		1790	2680	3530	4350		1730	2590	3410	4210	
	30		1780	2660	3540			1730	2580	3440		
	40		1780	2650				1750	2590			
	50		1740					1720				
	20	9,525	1800	2700	3610	4470	5290	1730	2600	3480	4300	5100
	25		1790	2690	3590	4480		1740	2610	3480	4350	
	30		1780	2710	3560			1730	2640	3480		
	40		1750	2670				1720	2620			
	50		1750	2650				1730	2610			
80 - S	10	6,35	2090	3030	3960	4890	5820	1790	2610	3420	4230	5040
80 - U	12	7,938	2240	3290	4370	5390	6350	2070	3050	4050	5000	5900
	15		2230	3280	4370	5390	6340	2100	3090	4110	5070	5980
	16		2230	3280	4370	5380	6340	2100	3100	4120	5090	6000
	20	9,525	2240	3380	4440	5500	6490	2130	3210	4230	5240	6180
	25		2240	3370	4430	5480	6500	2150	3230	4260	5270	6260
	30		2230	3350	4410	5500		2150	3240	4270	5320	
	40		2200	3360	4400			2150	3270	4290		
	50		2210	3310				2170	3250			
	20	12,7	2330	3570	4750	5920	7040	2230	3400	4530	5650	6720
	25		2320	3550	4730	5900	7020	2240	3420	4560	5690	6760
	30		2310	3540	4710	5880		2240	3430	4570	5700	
	40		2350	3560	4720			2300	3480	4610		
	50		2320	3520				2280	3450			
100 - S	10	6,35	2500	3620	4740	5860	6970	2030	2960	3890	4810	5730
100 - U	12	7,938	2740	4020	5260	6520	7670	2480	3650	4780	5930	6980
	15		2730	4020	5260	6520	7660	2520	3720	4870	6040	7110
	16		2730	4020	5260	6510	7660	2530	3730	4890	6060	7140
	20	9,525	2740	4100	5380	6640	7850	2580	3850	5060	6240	7390
	25		2740	4090	5370	6620	7830	2600	3890	5110	6300	7460
	30		2730	4080	5400	6600		2620	3910	5180	6340	
	40		2720	4050	5360			2630	3930	5190		
	50		2730	4060				2660	3950			
	20	12,7	2920	4370	5820	7110	8440	2730	4090	5440	6650	7910
	25		2920	4360	5810	7150	8430	2760	4130	5500	6780	7990
	30		2910	4350	5790	7130		2780	4160	5530	6820	
	40		2890	4320	5750			2790	4180	5560		
	50		2930	4340				2850	4230			
120 - U	20	12,7	3440	5140	6740	8340	9840	3150	4710	6180	7650	9050
	25		3440	5140	6730	8320	9820	3200	4790	6280	7770	9180
	30		3430	5130	6770	8310		3230	4830	6390	7840	
	40		3420	5100	6740			3270	4880	6450		
	50		3390	5070				3280	4890			

Required Information For Ballscrew Order

v.2

ENTERPRISE: _____ DRAWING: _____ DATE: _____

The indispensable data for the manufacturing a Ballscrew are the following:

- Type of nut: ☐ Double TD ☐ Compact TC ☐ Single TS
- Tying type: ☐ Lateral Flange ☐ Centred Flange ☐ Cylindrical Nut
- Flange shape: ☐ 'A' Shape ☐ 'B' Shape ☐ 'C' Shape

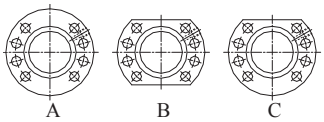

- Nominal diameter d_0: ____
- Lead P_h: ____
- Ball diameter D_W: ____ and material: ☐ Steel ☐ Ceramics
- Quantity of circuits i: ____
- Threaded length l_{hr}: ____ mm
- Length of the nut L_N: ____ mm Nut external diameter D_1: ____ mm
- Ball recirculation system: ☐ External 'U' ☐ Internal 'S'
- Manufacturing tolerance: ☐ ISO 1 ☐ ISO 3 ☐ ISO 5 ☐ ISO 7 ☐ ISO 10

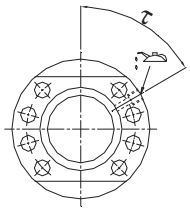

The following data is necessary if it is required to have the proper preload and to put the wipers and recirculation systems in the suitable position according to machine requirements and SHUTON to check if there is any problem of loads or speed:

- Nut position assembled in machine, angle of the oiling with the vertical 'see drawing' τ: ____
- Ballscrew rotation speed N: ____ r.p.m. or table feed speed v: ____ m/min
- Lengths in 'mm':
  - Stroke l_r: ____
  - Security l_{e1}-l_{e2}: ____ ____
  - Thread-end to support l_{ap1}-l_{ap2}: ____ ____
  - Between supports l_{ap}: ____

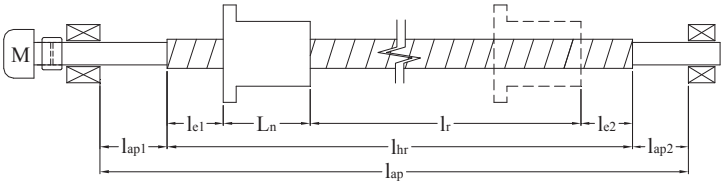

- Disposition: ☐ Horizontal ☐ Vertical without counterweight ☐ Vertical with balanced counterweight
- Lubrication system: ☐ Grease ☐ Oil ☐ Air – Oil
- Rotating element: ☐ Rotating shaft ☐ Rotating nut
- Assembly: ☐ Fixed – Fixed ☐ Fixed – Supported ☐ Fixed – Free
  ☐ Pretensioned shaft ☐ Fixed non pretensioned shaft ☐ One support axially free shaft

- Maximum machining force $F_{max,mec}$: ____ N
- Maximum inertia force $F_{max,inertia}$: ____ N or combination that gives the highest result of
  total weight to move M: ____ kg multiplied by table acceleration a: ____ m/s^2

If it is required SHUTON to check the life expectancy, is necessary to fill in with as real data as possible the duty cycle with percentages of time, machining forces and table feed speeds:

Stopping times:	q:	%				
Maximum speed:	q:	%				
Acceleration:	q:	%				
Working condition 1:	q:	%	F:	N	v:	m/min
Working condition 2:	q:	%	F:	N	v:	m/min
Working condition 3:	q:	%	F:	N	v:	m/min
Working condition 4:	q:	%	F:	N	v:	m/min
Working condition 5:	q:	%	F:	N	v:	m/min
Working condition 6:	q:	%	F:	N	v:	m/min

Is important the customer to facilitate all these data when doing the order, so as the operation is good and the Ballscrew is well dimensioned.

SHUTON, S.A. P.O.box 654 01080 VITORIA-GASTEIZ Phone: (+34) 945 465 629 Fax: (+34) 945 465 610 E-mail: technique@shuton.com

SHUTON LOCATION

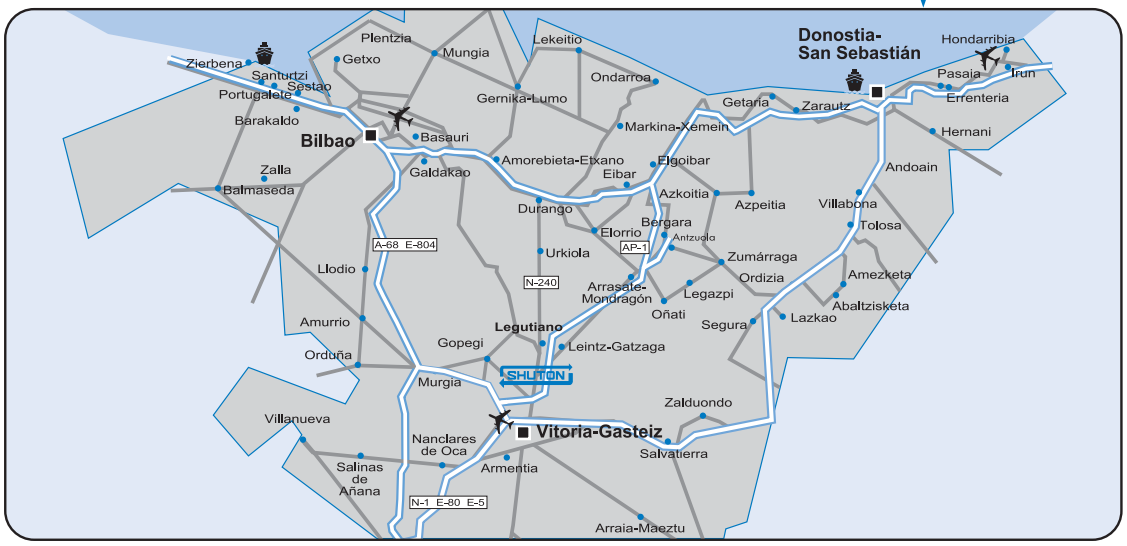

CONTACT

SHUTON, S.A.

Pol. Ind. Goiain • C/ Subinoa, 5
01170 Legutiano (Álava) - SPAIN
P.O.box 654
01080 Vitoria-Gasteiz - SPAIN
Phone: +34 945 465 929
Fax: +34 945 465 610

Departments contacts

General Information	shuton@shuton.com
Sales - Commercial	sales@shuton.com
Production - Quality	production@shuton.com
Technical - Engineering	technique@shuton.com

NOTES

SHUTON , S.A.
Pol. Ind. Goiain · C/ Subinoa, 5
01170 Legutiano (Alava) - SPAIN

P.O.box 654
01080 Vitoria-Gazteiz - SPAIN

Phone: + 34 945 465 629
Fax: + 34 945 465 610

E-mail: shuton@shuton.com
http://www.shuton.com
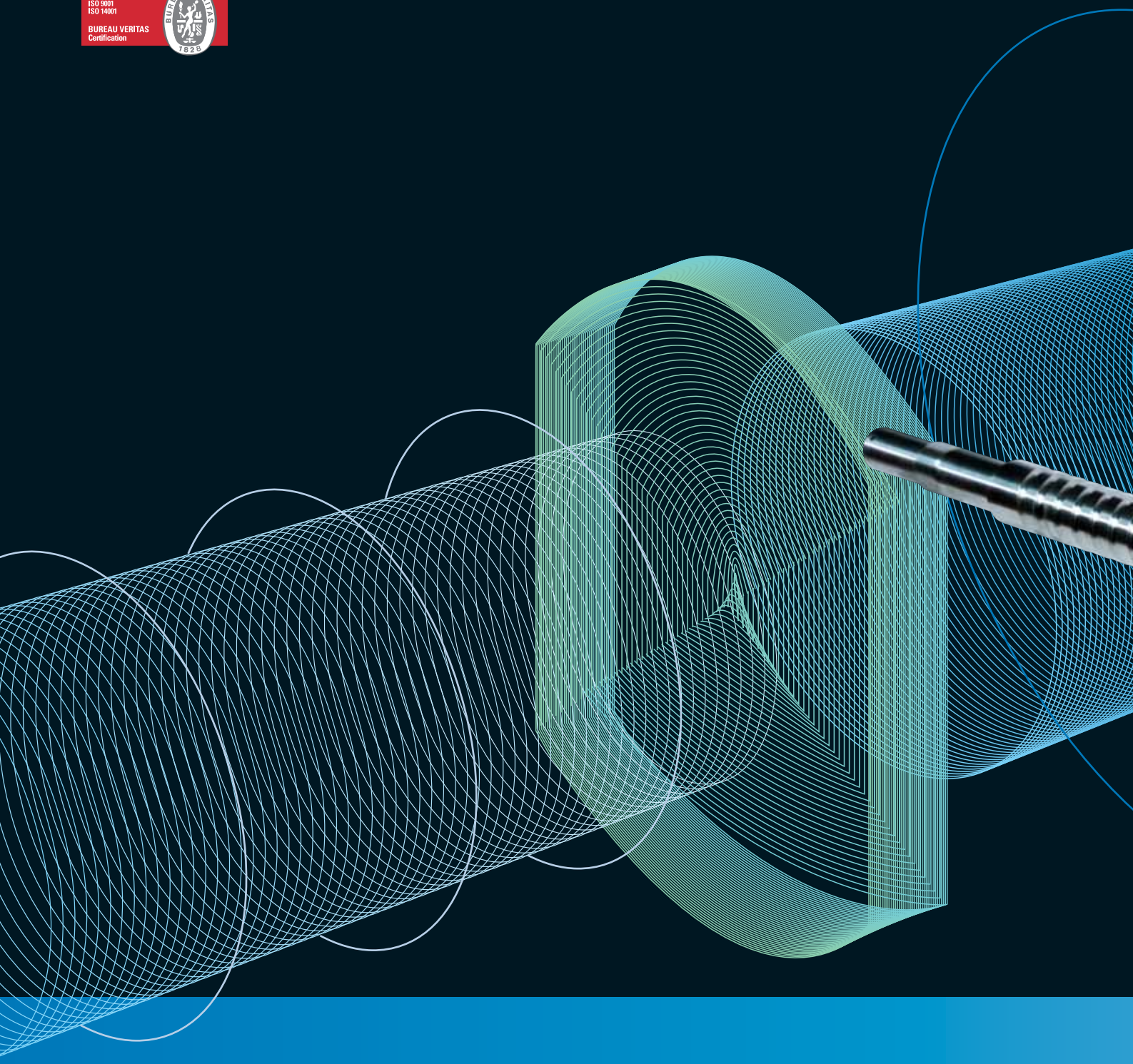
ISO 9001
ISO 14001
BUREAU VERITAS
Certification