FAR

www.far.co.in

PRECISION AT ITS BEST

Company Profile & Product Catalogue

2009

Bangalore; one of the charming cities of South India.... now called Bengaluru has transformed itself to be the technology capital of India.

The hub the Indian Machine Tool, Aerospace, Electronics and IT Industries has now become the home of most of the Major companies in the World. It is also the home of a large number of Educational and Research Institutions. People from different parts of India and the world have successfully made Bengaluru their home.

Bengaluru has a long association with the Machine Tool Industry. The Central Machine Tool Institute and the Hindustan Machine Tools Company were started in Bangalore in the 1960s. These organizations have spun off a large base of trained and skilled manpower and industries in the Machine Tool field.

The city is now going through a major infusion of infrastructure facilities and will soon be a very modern city.

Index

Our Mission

Indigenous development and supply of critical accessories for machine tools

Our Vision

To be one of the leading manufacturers of machine tool accessories in the world.

FAR - A Brief History

Fenwick and Ravi (FAR) is a leading machine tool company established in the year 1990 at Bangalore, the capital of Karnataka state in India. Situated on a 1 acre facility with about 22,000 sq. ft. of built up area.

FAR specialises in the manufacture of Barfeeders and Self Centering Steady Rests for CNC turning center, special purpose machines like crank web milling, crank shaft oil hole drilling, crank pin milling, cylindrical grinding, crank shaft grinding, cam shaft grinding etc.

We are equipped with the state-of-the-art technology, highly qualified and experienced people, who are the back bone of our organization. FAR products go through stringent quality control process right from design to the finishing stage. We can even provide customised solutions as per the clients requirements.

FAR's products have applications in different kind of industries like auto mobile sector, defense, railway, aerospace, machine tool industry etc. FAR products are compatible with machines like HAAS, DOOSAN, TAKISAWA, MORI SEIKI, MAZAK, KIA, CNC TAKANG, HNK, ALEXTECH, PROKING LATHES, LEADWELL, OKUMA, DMG, NILES-SIMMONS, ECOCA, LANDIS, SCHAUDT, TOSS, along with other Indian machines. Since 2004 onwards FAR exports its product to countries like ITALY, FRANCE, USA, BRAZIL, CHINA, GERMANY, CANADA, AUSTRALIA, KOREA, SPAIN, PORTUGAL, ROMANIA , SOUTH AFRICA, TAIWAN, THAILAND, TURKEY, MIDDLE EAST, POLAND etc.

We at FAR believe high quality products and the price advantage are the key to success in a keen competitive market. FAR has a vision to be among the top manufactures of machine-tool-accessories in the world and is working resolutely towards achieving that goal.

The People behind FAR

FAR was started when Fenwick Thomas and R. Ravi; both graduate Engineers; decided to put together their combined skills and experience; to start a machine tool company that would be on par with any of the leading international companies. In this endeavor they were guided by Mr. P Radhakrishnan, MS (WISCONSIN, USA) who is a renowned technocrat and Machine designer.

To fulfill this dream, over the years we have built a team of highly qualified and experienced personnel. Many of them have been with us since its inception; their dedicated efforts have gone a long way in making FAR a truly international company. The team is up-to-date with all the newest technological advances in the industry.

As part of its CSR initiative FAR also has a training department which conducts a one year training programs for very young boys from financially weak background. These boys undergo both classroom as well as on the Job training on machines.

This is FAR's ongoing program of giving back to the society, to help build a future for these young individuals.

Research & Development Department.

Quality Control Department

FAR - Technology and Facilities

FAR is housed in a very modern facility equipped with the latest star-of-the-art technology and equipment. Every product starts at the design center where they are designed using the latest CAD/CAM software. Once the design is approved it then goes to the planning section which chalks out a schedule for all the stages. From planning it proceeds to the production section which comprises of the machine shop, the quality department and the assembly section. Almost all production is done in-house on the shop floor that is equipped with CNC turning center and VMC's, jigboring, planning machine, cylindrical grinding machine, surface grinders CNC wire cutting machine etc.

Quality is checked at every stage and on every single part. Once the final assembly is done it undergoes a final quality check and then goes to the shipping department.

ISO 9001

BUREAU VERITAS
Certification

FAR - R&D and ISO Quality Standards

FAR is committed to innovation of its products, both in terms of design and functionality. We have a highly motivated research and development team that is constantly working to improve our products. We also work on customizing as per our clients requirements.

FAR is an ISO certified company, quality is our commitment to our clients. We are equipped with the latest inspection machines and processes.

Steady Rests - Turning Steadies

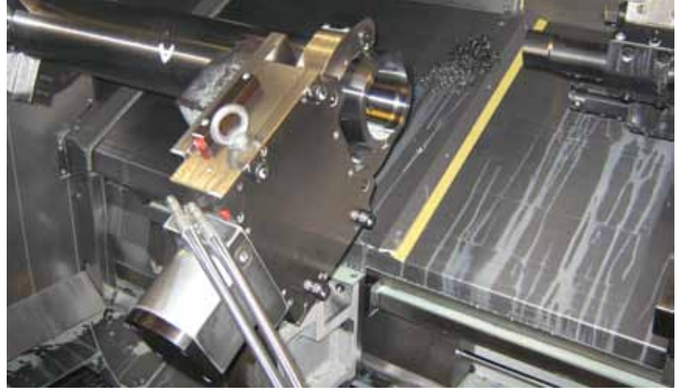

Steady Rests

Steady rests are normally used for efficient machining of long slender shafts. On conventional steady rests three screw 120^0 apart are adjusted manually. This type of centering process is not reliable and depends on operator's skill.

FAR self centering steady rests work on an entirely different principle. Three rollers hold the work piece at points Approx120^0 apart. These rollers move such that they always inscribe concentric circles between them. This feature along with the internal compensating system prevents the dislocation of work piece center under changing clamping pressures. This results in high centering accuracy. FAR Steadies are made of high grade alloy steel and all parts are fully hardened to 60 HRC, and nitrided to be 100% corrotion free.

By mounting accordingly these steady rests can be used for turning outside diameters, inside diameters, facing, drilling, grinding , induction hardening etc.

Steady rests can be operated either hydraulically or pneumatically with the only difference being the clamping cylinder bore.

In FRU series the clamping cylinder is fixed as axial extension at the rear end. With FRU -B series the cylinder is fixed to the side of the steady rests to save mounting space.

FAR produce two kinds of steady rests:

- Steady Rests for Turning
- Steady Rests for Grinding

Listed below models of steady rests:

FRU Standard steady rest with rear mounted cylinder and diameter range from 4mm to 630mm

FRUA Steady rest with rear mounted cylinder and extra opening for top arm. Diameter range from 8 mm to 630mm

FRUB Steady rest with side mounted cylinder and diameter range from 12 mm to 630mm

FRUAB Steady rest with side mounted cylinder and extra opening for top arm diameter range from 20 mm to 630mm

KRHS Steady rest with rear mounted cylinder for crank shaft machining

KRSHS Steady rest with side mounted cylinder for crank shaft machining

VLHS Steady rest with vertical arm opening for crank shaft milling

GHS steady rest for grinding

KRGU Steady rest for crank shaft grinding

VGHS Steady rest for grinding with vertical arm opening

CS Compress size steady rests

HL heavy duty steady rests – Maximum clamping diameter 1050 mm and weight carrying capacity 30,000 kg.

SPECIAL STEADY RESTS

Suitable for Shell machining, screw machining, friction welding machine, etc.

Steady Application

Tandem Steady Rest Fixed

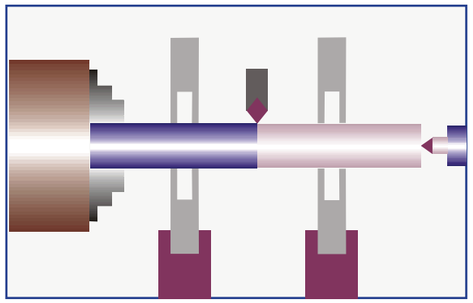

Steady Rest Fixed for end machining

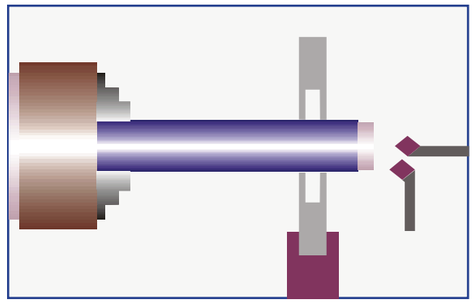

Steady Rest Travelling

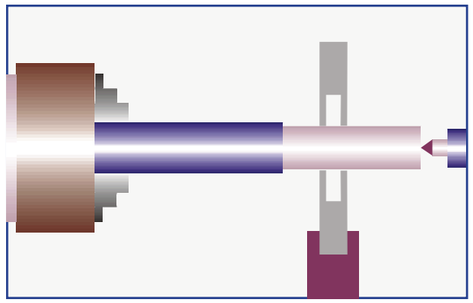

Steady Rests

Technical features and standard equipment

- Automatic centering to reduce cycle time and increased productivity.
- High centering accuracy.
- Replaceable sealing strips and provision for compressed air connection prevents the entry of coolant and dirt to the body of steady rests.
- All standard steady rests have provision for centralized lubrication systems.
- **Actuating cylinder is provided with integral safety valve ensure support of the work piece under sudden pressure drops.**
- These are based on special cam design, which is proved in the field.
- Adjustable 3 piece chip guard for outer rollers with minimum reduction of clamping range.
- Positive opening of the steady rest is ensured by precisely engineered opening mechanism
- Compact and robust designs allow the machine tool to be used under optimum conditions.
- Special rollers, which have multiple sealing disks, imported from Europe are used for the steady rests.
- Actuating cylinder can be operated either hydraulically or pneumatically.
- These steady rests can be mounted either on slant or flat bed lathes. Rigid and precisely made brackets ensure centering accuracy.
- All internal and outside parts are case hardened and ground to ensure highest precision and reliability.
- Middle roller and roller pocket is protected against dirt by a roller stripper.
- These are suitable for fixed as well as traveling applications.
- Optional provision for manual lubrication can be provided.

Optional equipment

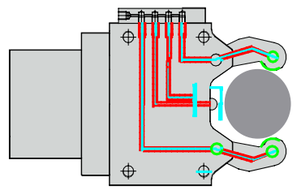

Central Lubrication

This lubrication system is used in heavy working conditions and high build of swarf as well as traveling steady rest applications. The steady rest is provided with a lubricating connection to supply the oil to the lubricating points and rollers through metering cartridges. The pressure required for the lubricating pump is 10-30 bar.

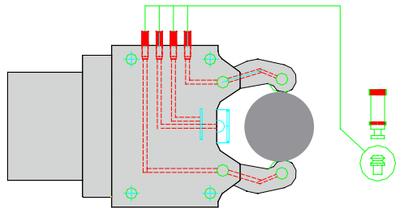

Manual Lubrication

This lubrication system is used for light duty working conditions and low building of swarf. The lubrication points and rollers are supplied with grease through grease nipple and grease gun. Steady Lubrication schedule depends on the working conditions normally every 4-8 operating hours.
Grease: `DIN 51402'

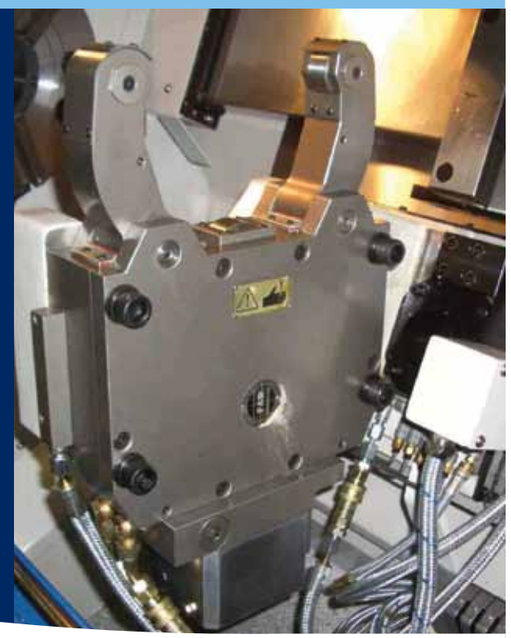

To avoid interference of chips with rollers and workpiece an optional built-in channel on the steady rest feeds coolant or air from a central connecting port to the arms of the steady rest.

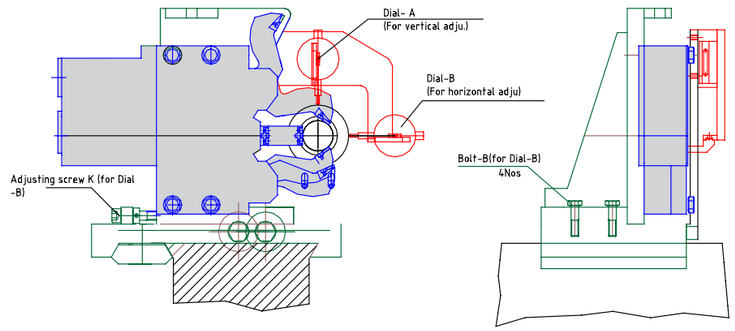

Optional Steady rest bracket with adjustment device

A suitable steady rest bracket is what helps the steady rest achieve its required precision. Sufficient rigidity and a flat square 90⁰ angle contact to the machine centre line are the most important factors.

Salient features

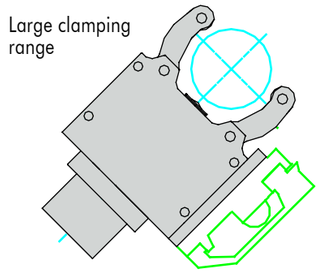

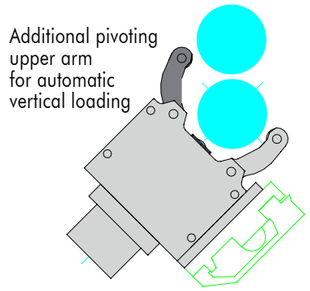

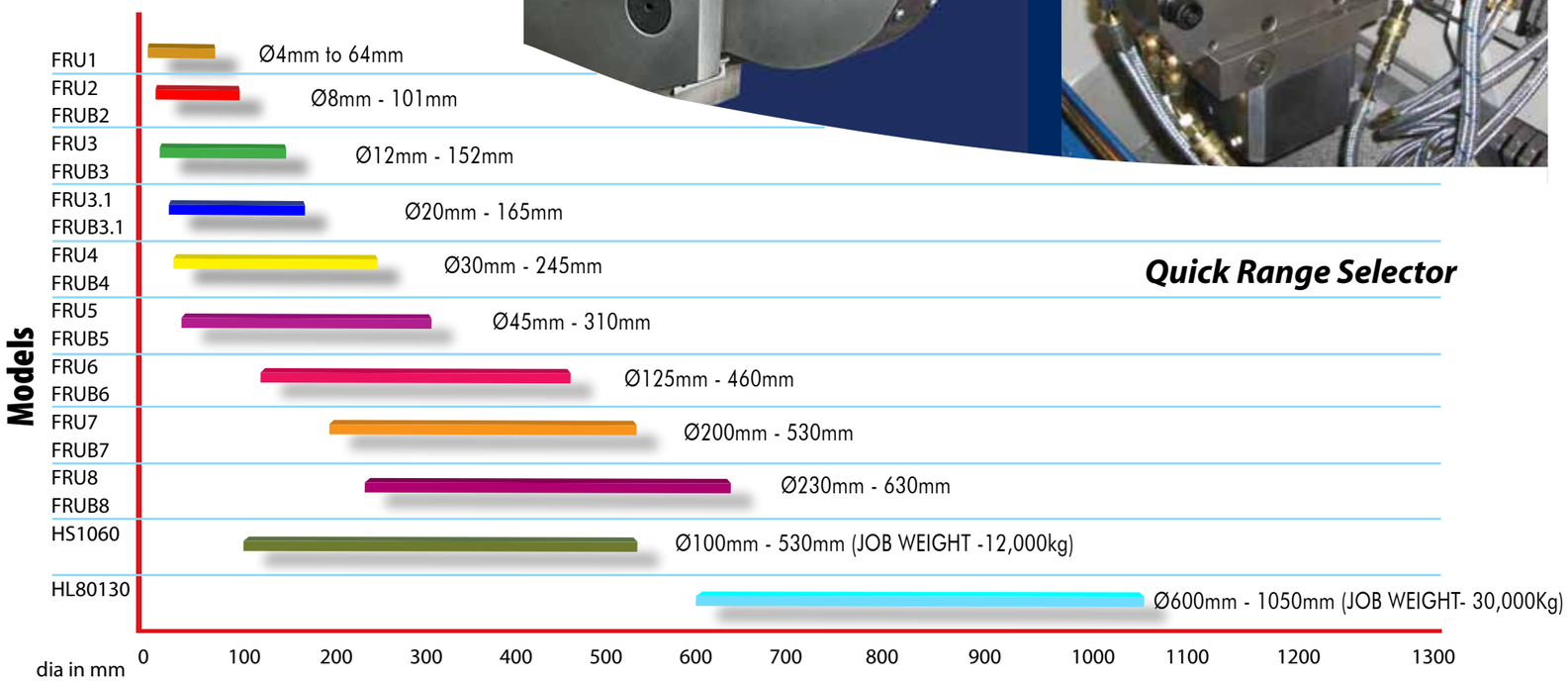

Quick Range Selector

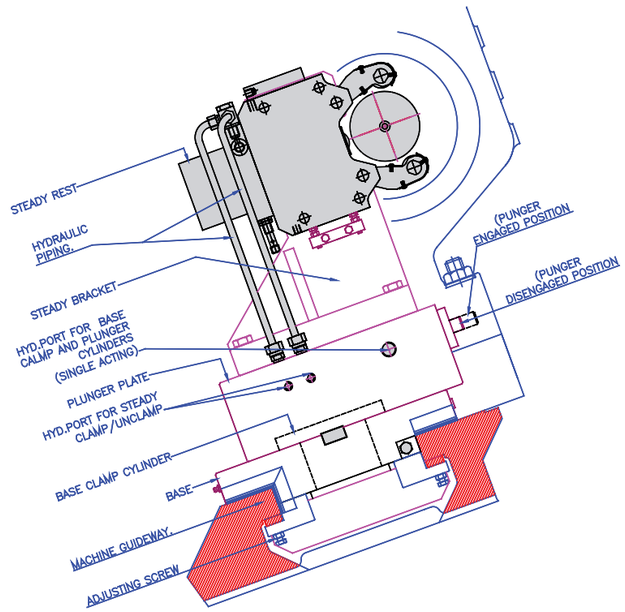

Steady rest for standard turning applications

Model: FRU

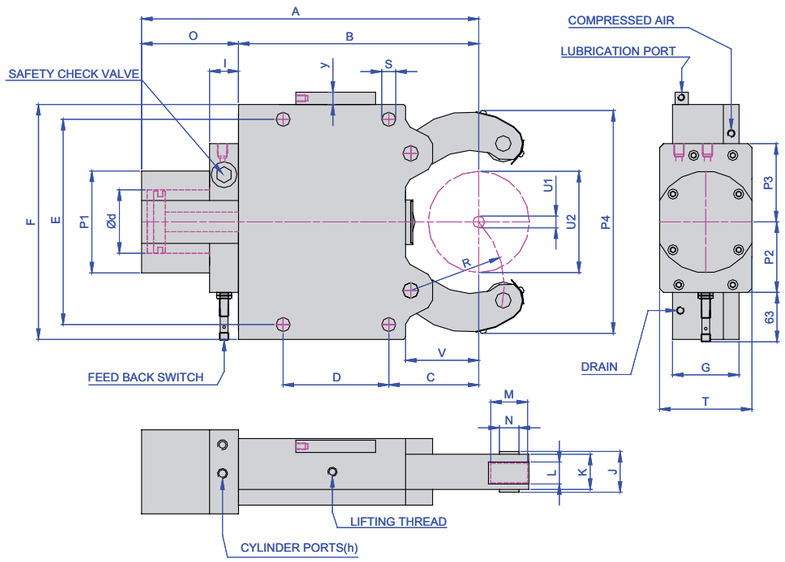

FRU Series

This series is for all standard applications. Available in a range of dias from 4 mm to 1100 mm. These steadies work on both flat bed as well as slant bed CNC lathes. We supply brackets for mounting according to the customers requirements

Standard Features:
- Safety Valve
- Provision for max. opening feedback
- 1 set swarf guard 3-piece
- Provision for compressed air connection
- Provision for centralized lubrication

STEADY REST TYPE		FRU1	FRU2	FRU3	FRU3.1	FRU3.2	FRU4	FRU5	FRU5.1	FRU6	FRU7	FRU8
	A	208.5	299	457	465	486	624	710	746.5	980	1240	1430
	B	137	195	308	316	332	437	500	530	709	900	1020
	C	51	70	115	123	138	146	178	198	215	320	375
	D	64	85	135	135	135	240	270	270	330	440	500
	E	118	170	262	262	262	365	400	400	610/640	650	855
	F	132	205	290	290	290	400	450	450	705	710	930
	G	55	70	85	85	85	110	145	145	145	162	190
	I	15	33	37	37	37	37	37	37	37	60	60
	J	33	42	52	52	52	67	83	83	83	94	110
	K	25	35	45	45	45	60	75	75	75	82	100
	L	12	19	25	25	25	25	29	29	29	32	32
	M	19	35	47	47	47	52	62	62	80	100	100
	N	10	21	25	25	25	32	36	36	42	55	55
	O	71.5	104	149	149	154	187	210	216.5	271	340	410
	P1	82.5	102	137	137	137	165	165	165	200	238	238
	P2	27.5	72	90	90	90	102	102	102	120	143	143
	P3	55	75	94	94	94	110	110	110	135	158	158
	P4	118.5	190	285	280	323	425	478	512	680	820	990
	R	51.5	75	119	124	139	172	209	229	290	398	402
	S	11	14	18	18	18	23	23	23	27	27	35
	T	49	70	102	102	102	126	144	144	158	190	230
	V	42.5	60	92	99	103	128	160	180	175	283	290
	Y	-	19	19	19	19	19	19	19	19	19	19
Centering range without chip guard.	**U1**	**4**	**8**	**12**	**20**	**50**	**30**	**45**	**85**	**125**	**200**	**230**
	U2	**64**	**101**	**152**	**165**	**200**	**245**	**310**	**350**	**460**	**530**	**630**
Centering range with 3 piece chip guard.	**U1**	**11**	**16**	**16**	**20**	**50**	**30**	**45**	**85**	**125**	**200**	**230**
	U2	**64**	**101**	**152**	**165**	**200**	**245**	**310**	**350**	**460**	**530**	**630**
Cylinder Bore.	d	30	50	80	80	80	100	100	100	130	150	150
Hyd. Connection. (BSP)	h	¼"	¼"	¼"	¼"	¼"	3/8"	3/8"	3/8"	3/8"	3/8"	3/8"
Operating pressure. Min/Max	bar	6/50	8/60	8/60	8/60	8/60	8/60	8/80	8/80	8/70	6/70	6/70
Max. clamp force/roller	daN	100	350	1000	1000	1000	1500	2000	2000	3000	4000	4000
Clamping press/roller at 15 bar	daN	35	100	250	250	500	500	500	500	670	900	900
Centering accuracy over the whole clamping range	mm	0.02	0.02	0.04	0.04	0.04	0.05	0.06	0.06	0.06	0.08	0.08
Repeatability.	mm	0.005	0.005	0.007	0.007	0.007	0.007	0.01	0.01	0.01	0.02	0.02
Max. peripheral speed.	m/min	850	950	800	800	725	725	670	670	525	570	570
Weight Approx.	kg	7	18.5	48	48	50	104	155	155	430	1000	1300

Steady rest with Rear mounted actuating cylinder and top arm extra opening.

Model: FRUA

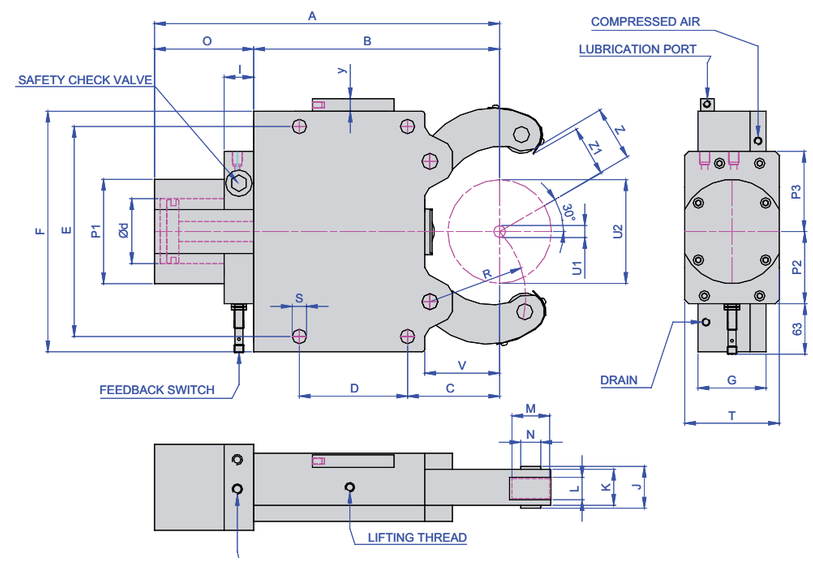

FRUA Series

This series of steadys are made for applications where vertical loading is required e.g. using a gantry loader. FAR has a standard range of these steadys.

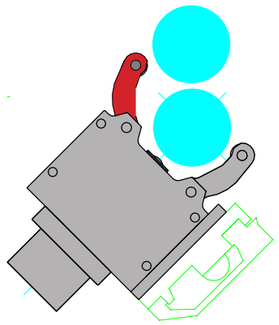

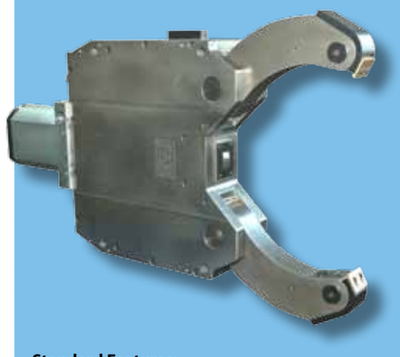

Standard Features:
- Safety Valve
- Provision for max. opening feedback
- 1 set swarf guard 3-piece
- Provision for compressed air connection
- Provision for centralized lubrication

STEADY REST TYPE		FRUA 1	FRUA 2	FRUA 3	FRUA 3.1	FRUA 4	FRUA 5	FRUA 6
	A	208.5	299	457	465	624	686	980
	B	137	195	308	316	437	500	709
	C	51	70	115	123	146	178	215
	D	64	85	135	135	240	270	330
	E	118	170	262	262	365	400	610/640
	F	132	205	290	290	400	450	705
	G	55	70	85	85	110	145	145
	I	15	33	37	37	37	37	37
	J	33	42	52	52	67	83	83
	K	25	35	45	45	60	75	75
	L	12	19	25	25	25	29	29
	M	19	35	47	47	52	62	80
	N	10	21	25	25	32	40	42
	O	71.5	104	149	149	187	186	271
	P1	82.5	102	137	137	165	168	200
	P2	27.5	72	90	90	102	94	120
	P3	55	75	94	94	110	118	135
	R	51.5	75	119	124	172	209	290
	S	11	14	18	18	23	23	27
	T	49	70	102	102	126	144	158
	V	42.5	60	92	99	128	160	175
	Y	-	19	19	19	19	20	19
Centering range without chip guard.	**U1**	**4**	**8**	**12**	**20**	**30**	**48**	**160**
	U2	**52**	**80**	**130**	**150**	**220**	**268**	**460****
Centering range with 3 piece chip guard.	**U1**	**11**	**16**	**20**	**20**	**30**	**48**	**160**
	U2	**52**	**80**	**130**	**150**	**220**	**268**	**460****
	Z	26.5	41	66	76	111	135	230**
	Z1	24	34	62	72	106	130	225**
Cylinder Bore.	d	30	50	80	80	100	100	130
Hyd. Connection. (BSP)	h	¼"	1/4"	1/4"	1/4"	3/8"	3/8"	3/8"
Operating pressure. Min./Max.	bar	6/50	8/60	8/60	8/60	8/60	8/60	8/70
Max. clamp force/roller.	daN	100	350	1000	1000	1500	2000	3000
Clamping press./roller at 15 bar	daN	35	100	250	250	500	500	670
Centering accuracy over the whole clamping range.	mm	0.02	0.02	0.04	0.04	0.05	0.06	0.06
Repeatability.	mm	0.005	0.005	0.007	0.007	0.007	0.01	0.01
Max. Peripheral speed.	m/min	850	950	800	800	725	670	525
Weight Approx.	Kg	7	18.5	48	48	104	160	430

** Angle of inclination is 19 degree instead of 30 degree

FAR

Standard steady rest with side mounted cylinder

Model: FRUB

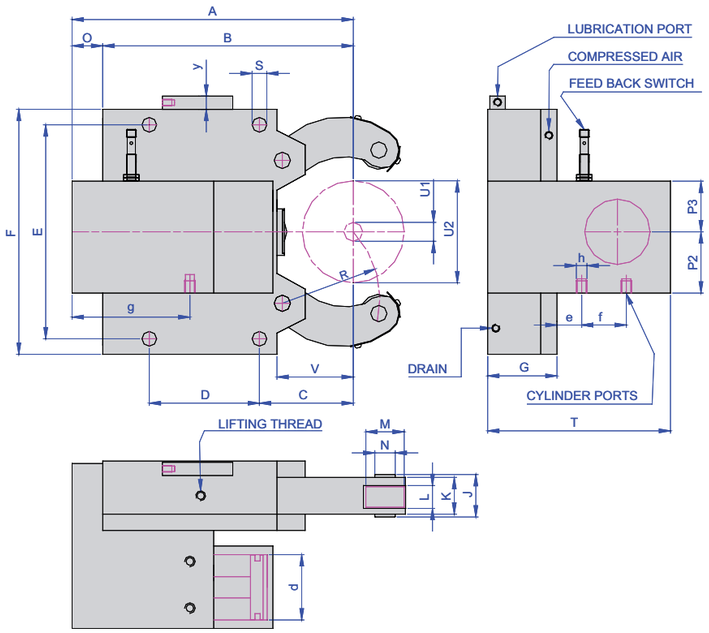

FRUB Series

This series is made for machines where the rear mounted cylinder may foul with the sheet metal enclosures or other machine enclosures. To achieve this the actuating cylinder of the steady rest is mounted on the side of the steady rest.

Standard Features:
- Safety Valve
- Provision for max. opening feedback
- 1 set swarf guard 3-piece
- Provision for compressed air connection
- Provision for centralized lubrication

STEADY REST TYPE		FRU-B 3	FRU-B 3.1	FRU-B 4	FRU-B 5	FRU-B 6	FRU-B 7	FRU-B 8
	A	346	356	480	624	810	1001	1130
	B	308	316	437	500	709	897.5	1020
	C	115	123	146	178	215	320	375
	D	135	135	240	270	330	440	500
	E	262	262	365	400	610/640	650	855
	F	290	290	400	450	705	710	930
	G	85	85	110	145	145	180	190
	J	52	52	67	83	83	112	110
	K	45	45	60	75	75	100	100
	L	25	25	25	29	29	32	32
	M	47	47	52	62	80	100	100
	N	25	25	32	36	42	55	60
	O	40	40	43	124	101	103.5	110
	P2	75	75	85	85	135	130	130
	P3	58	58	68	85	115	130	130
	R	119	124	172	209	290	398	402
	S	18	18	23	23	27	27	35
	T	198	198	244	325	350	405	487
	V	92	99	128	160	175	283	290
	Y	19	19	19	19	19	19	27
Centering range without chip guard.	**U1**	**12**	**20**	**30**	**45**	**125**	**200**	**230**
	U2	**152**	**165**	**245**	**310**	**460**	**530**	**630**
Centering range with 3 piece chip guard.	**U1**	**16**	**20**	**30**	**45**	**125**	**200**	**230**
	U2	**152**	**165**	**245**	**310**	**460**	**530**	**630**
Cylinder Bore.	d	80	80	100	100	130	150	150
	e	58	58	68	85	55	191	191
	f	27	27	39	40	50	50	50
	g	180	180	220	270	430	450	450
Hyd. Connection. (BSP)	h	¼"	¼"	3/8"	3/8"	3/8"	3/8"	3/8"
Operating pressure. Min/Max	bar	8/60	8/60	8/60	8/80	8/70	8/70	8/70
Max. clamp force/roller.	daN	1000	1000	1500	2000	3000	4000	4000
Clamping press./roller at 15 bar	daN	250	250	400	400	600	880	880
Centering accuracy over the whole clamping range	mm	0.04	0.04	0.05	0.06	0.06	0.08	0.08
Repeatability	mm	0.007	0.007	0.007	0.01	0.01	0.02	0.02
Max. peripheral speed.	m/min	800	800	720	650	525	570	570
Weight Approx.	kg	53	53	115	190	500	1000	1300

FAR

Steady rest with side mounted actuating cylinder and extra opening for the top arm.

Model: FRUAB

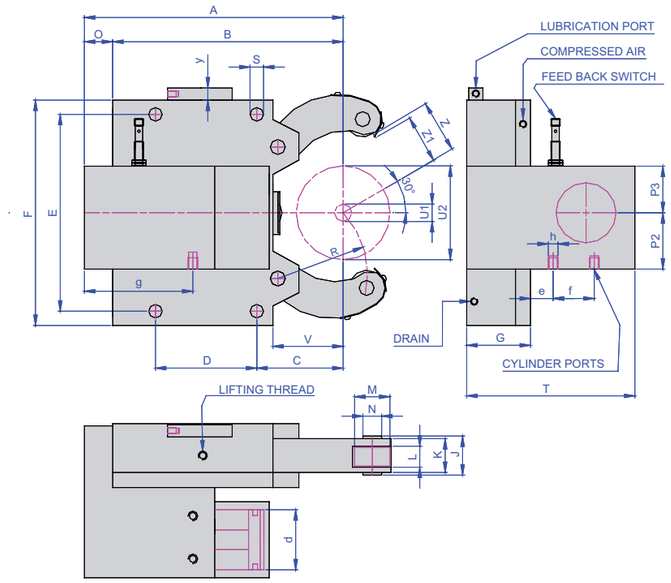

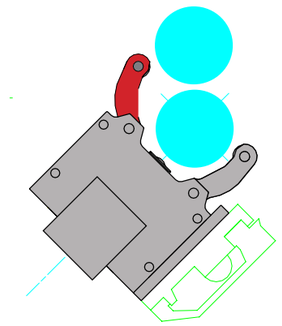

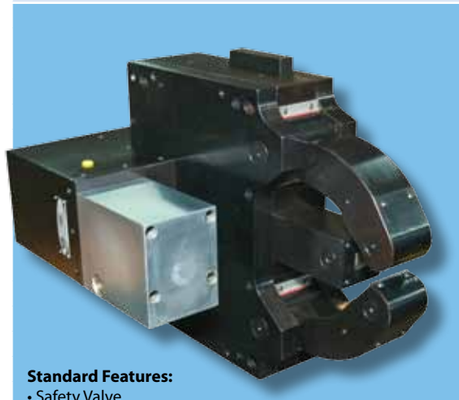

Standard Features:
- Safety Valve
- Provision for max. opening feedback
- 1 set swarf guard 3-piece
- Provision for compressed air connection
- Provision for centralized lubrication

STEADY REST TYPE		FRUA-B 3	FRUA-B 3.1	FRUA-B 4	FRUA-B5	FRUA-B 6
	A	346	356	480	624	810
	B	308	316	437	500	709
	C	115	123	146	178	215
	D	135	135	240	270	330
	E	262	262	365	400	610/640
	F	290	290	400	450	705
	G	85	85	110	145	145
	J	52	52	67	83	83
	K	45	45	60	75	75
	L	25	25	25	29	29
	M	47	47	52	62	80
	N	25	25	32	36	42
	O	40	40	43	124	101
	P2	75	75	85	85	135
	P3	58	58	68	85	115
	R	119	124	172	209	290
	S	18	18	23	23	27
	T	198	198	244	325	350
	V	92	99	128	160	175
	Y	19	19	19	19	19
Centering range without chip guard.	**U1**	**12**	**20**	**30**	**50**	**160**
	U2	**130**	**150**	**220**	**268**	**460****
Centering range with 3 piece chip guard.	**U1**	**20**	**20**	**30**	**50**	**160**
	U2	**130**	**150**	**220**	**268**	**460****
	Z	66	76	111	135	230**
	Z1	62	72	106.5	130	225**
Cylinder Bore.	d	80	80	100	100	130
	e	58	58	68	85	55
	f	27	27	39	40	50
	g	180	180	220	270	430
Hyd. Connection. (BSP)	h	¼"	¼"	3/8"	3/8"	3/8"
Operating Press. Min/max	bar	8/60	8/60	8/60	8/80	8/70
Max. clamp pressure/roller.	daN	1000	1000	1500	2000	3000
Clamping press./roller at 15 bar	daN	250	250	400	400	660
Centering accuracy over the whole clamping range.	mm	0.04	0.04	0.05	0.06	0.06
Repeatability.	mm	0.007	0.007	0.007	0.01	0.01
Max. Peripheral speed	m/min	800	800	720	650	525
Approx. weight	kg	55	55	115	190	500

Steady rest for crank shaft turning

Model: KRHS

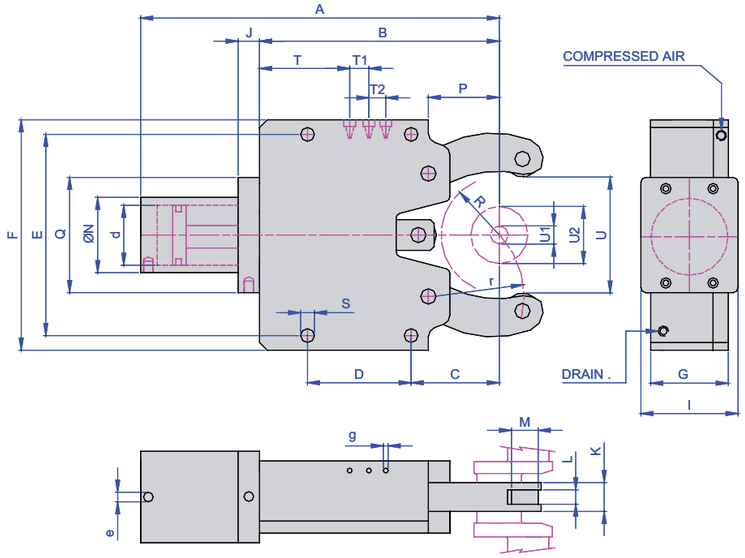

KRHS Series

Steady rest for crank shaft machining is a very important variant of steady rests. FAR has developed and supplied the entire range of steady rests required for crank shaft machining applications such as motor car to heavy railway and marine crank shafts.

STEADY REST TYPE.		KRHS315P	KRHS 520D	KRHS 528C	KRHS 930	KRHS 839
	A	503	621	731	710	861
	B	331	442	515	500	619
	C	138	180	178	178	233
	D	135	210	270	270	270
	E	266	330	400	400	400
	F	300	370	450	450	450
	G	80	67	102	145	145
	I	100	118	102	144	145
	J	31	40	40	40	40
	K	22	26	32	40	38
	L	14	16	20	20	20
	M	35	40	62	62	62
	N (dia)	137	132	147	147	147
	P	108	160	160	160	215
	Q	161	196	186	186	186
	r	139	187.5	209	209	250
	S	18	20	23	23	23
	T	113	170	183	163	227
	T1	25	27	32	32	23
	T2	25	27	32	32	23
Clamping Ranges without chip guard	**U1**	**40**	**45**	**70**	**90**	**80**
	U2	**85**	**100**	**150**	**300**	**190**
Max. axial Opening	U	220	236	322	303	402
Clamping range with Chip guard	**U1**	**40**	**45**	**70**	**90**	**80**
	U2	**85**	**100**	**150**	**300**	**190**
	U	220	236	322	303	380
Eccentric throw (R value)	R	110	120	155	150	195
Cylinder bore.	d	80	80	80	80	80
Hyd. Connection. (BSP)	e	¼ "	¼ "	¼ "	3/8 "	3/8 "
Lubrication ports	g	M8X1	M8X1	M 10X1	M 10X1	M 10X1
Standard Operating Pressure	bar	5-30	5-40	5-55	5-55	5-55
Max. Operating pressure	bar	35	45	60	60	60
Clamping press./roller at 6 bar	daN	100	100	100	100	100
Max. clamping pressure/roller.	daN	500	1000	1400	1400	1400
Centering accuracy over the whole clamping range.	mm	0.04	0.05	0.05	0.05	0.05
Repeatability	mm	0.01	0.01	0.01	0.01	0.01
Max .Peripheral speed.	m/mi	500	525	350	350	350
Max. Peripheral speed at half max. clamping press.	m/mi	850	865	850	850	850
Weight Approx.	kg.	50	70	150	185	190

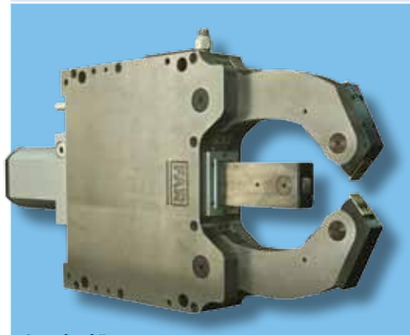

Standard Features:
- Safety Valve
- Provision for max. opening feedback
- 1 set swarf guard 3-piece
- Provision for compressed air connection
- Provision for centralized lubrication

Optional Features:
- Provision for coolant flush

Specially designed for crank shaft machining with side mounted actuating cylinder

Model: KRSHS

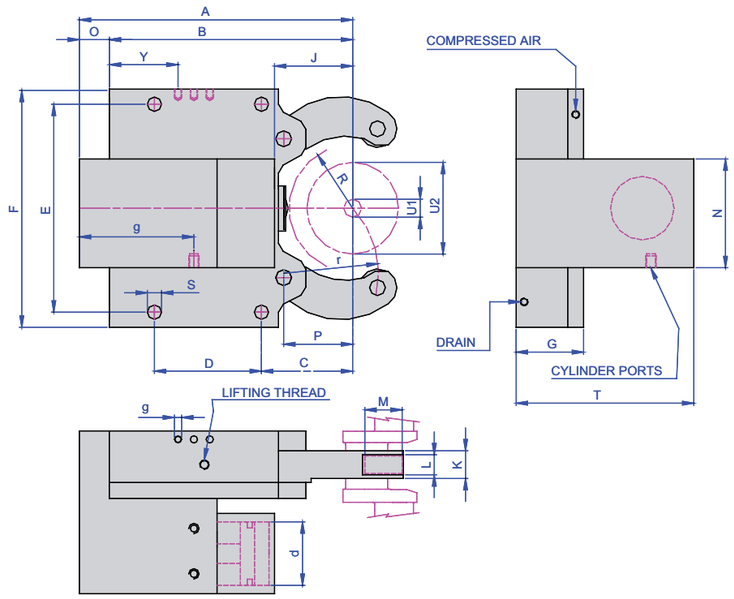

STEADY REST TYPE.		KRSHS 315D	KRSHS 315H	KRSHS 510	KRSHS521
	A	355	367	334	340
	B	332	363	296	340
	C	138	170	103	133
	D	135	135	135	135
	E	266	266	266	288
	F	300	300	300	315
	G	80	85	82	89
	J	108	135	83	110
	K	22	45	22	28
	L	14	18	14	18
	M	35	47	35	47
	N	130	130	130	139
	O	24	4	38	0
	P	108	140	73	110
	r	139.5	174	115	144
	S	M20x2.5 P	18	M20x2.5 P	M20x2.5 P
	T	220	211	206	224
	Y	113	113	113	133
Clamping Ranges without chip guard	**U1**	**40**	**70**	**45**	**50**
	U2	**70**	**150**	**110**	**100**
Max. axial Opening	U	216	170	160	211
Clamping range with Chip guard	**U1**	**40**	**70**	**45**	**50**
	U2	**70**	**150**	**110**	**100**
	U	216	170	160	211
Eccentric throw (R value)	R	108	85	75	105
Cylinder bore.	d	50	80	50	80
Hyd. Connection. (BSP)	e	¼ "	¼ "	¼ "	¼ "
Lubrication ports	g	M8X1	M 8X1	M 8X1	M8X1
Standard Operating Pressure	bar	5-30	5-30	5-30	5-30
Max. Operating pressure	bar	35	35	35	35
Clamping press./roller at 6 bar	daN	39	100	39	100
Max. clamping pressure/roller.	daN	500	520	240	520
Centering accuracy over the whole clamping range.	mm	0.04	0.04	0.04	0.04
Repeatability	mm	0.01	0.01	0.01	0.01
Max. Peripheral speed.	m/mi	500	450	500	450
Max. Peripheral speed at half max. clamping press.	m/mi	850	825	950	825
Weight Approx.	kg.	50	50	40	55

Standard Features:
- Safety Valve
- Provision for max. opening feedback
- 1 set swarf guard 3-piece
- Provision for compressed air connection
- Provision for centralized lubrication

Steady rest with top arm opening for vertical loading

Model: VLHS

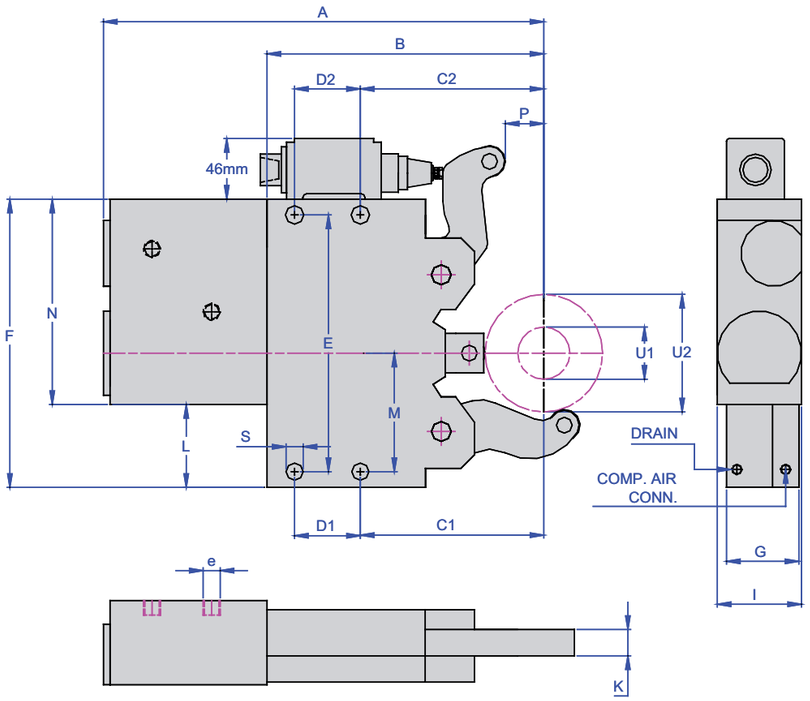

STEADY REST TYPE.		VLHS 480	VLHS 480A	VLHS7513
	A	335	335	420
	B	207	207	291
	C1	139.5	139.5	155
	C2	139.5	139.5	200
	D1	50	50	105
	D2	50	50	60
	E	195	195	305
	F	219	219	340
	G	65	65	90
	I	74	74	90
	K	30	30	45
	L	102	102	152.5
	M	90	90	135
	N	140	140	209
	P	29	22	70
	S	Ø13	Ø13	18
Centering Ranges	**U1**	**40**	**15**	**75**
	U2	**80**	**67**	**130**
Cylinder bore.	d	50	50	50
Hyd. Connection. (BSP)	e	¼"	¼"	¼"
Standard Operating Pressure	bar	8-20	8-20	8-30
Max. Operating pressure	bar	25	25	35
Clamp. Press./Roller at 6 bar	daN	40	40	40
Max. clamp pressure/Roller	daN	150	150	200
Centering accuracy over the whole clamping range.	mm	0.020	0.020	0.020
Repeatability	mm	0.005	0.005	0.005
Weight Approx.	kg	17	17	42

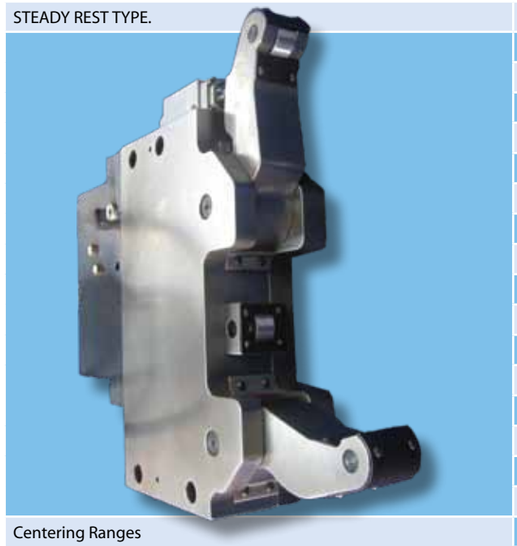

Model: COMPRESS SIZE STEADY REST (CS)

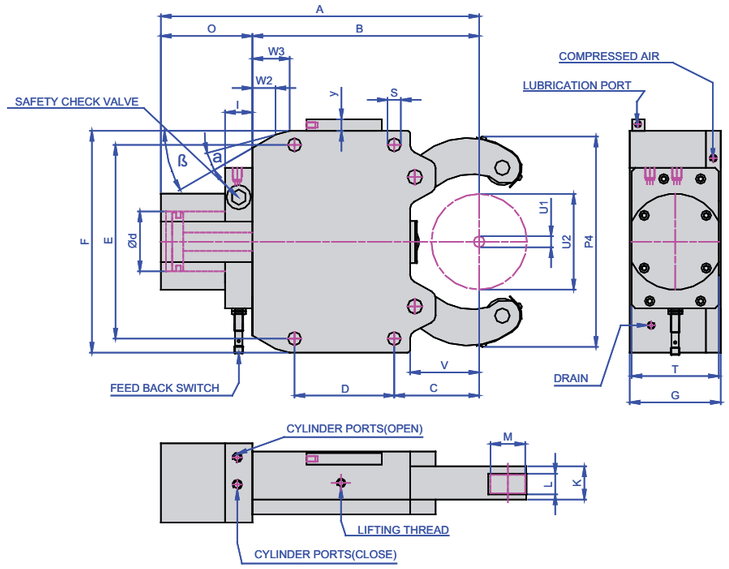

STEADY REST TYPE.		CS4	CS5.1
	A	609	812
	B	450	622
	C	168	240
	D	180	240
	E	360	445
	F	400	485
	G	125	150
	I	45	40
	K	60	75
	L	25	29
	M	52	62
	O	159	190
	P4	468	632.5
	R	200	283.5
	S	23	23
	T	111	121
	V	146	215
	Y	20	20
	W1	100	135
	W2	62	56
	ß	30	30
	α	15	15
Centering range with chip guard	**U1**	**60**	**100**
	U2	**280**	**410**
Cylinder bore.	d	90	100
Hyd. Connection.(BSP)	h	3/8"	3/8"
Operating pressure.(Min/Max)	bar	08/70.	08/80.
Max. Clamp force /roller.	daN.	1500	2000
Centering accuracy over the whole clamping range.	mm	0.05	0.06
Repeatability	mm	0.007	0.01
Max.peripheral roller speed.	m/min	700	700
Weight Approx.	kg	90	180

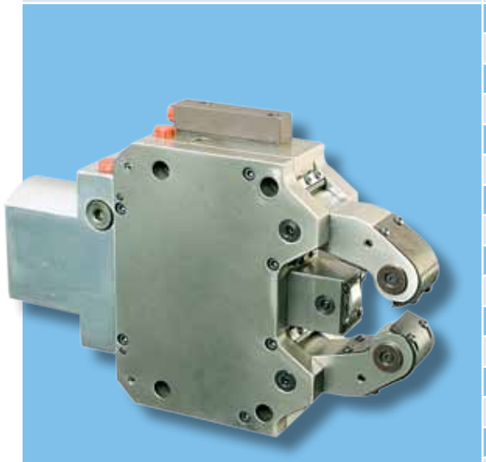

Standard Features:
- Safety Valve
- Provision for max. opening feedback
- 1 set swarf guard 3-piece
- Provision for compressed air connection
- Provision for centralized lubrication

Model: HEAVY DUTY STEADY RESTS (HL)

(Component weight : 10 - 40 tonnes)

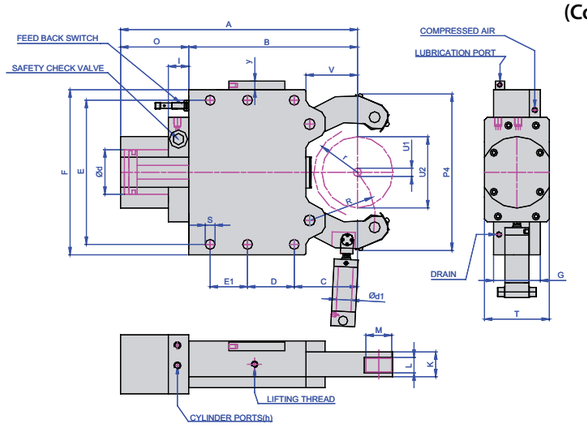

STEADY REST TYPE.		HL80130	HS1060SAL	KRHS1540
APPLICATIONS		STANDARD TURNING		CRANK SHAFT TURNING
 **Highlights:** • Very Heavy duty construction of steady rest. • Large rollers to handle very heavy loads (10 - 40 Tonnes) • Hydraulic support to Bottom arm for using on large flat bed lathes. • For turbine shaft, windmill shaft, marine crank shafts	A	2266	1600	1505
	B	1760	1105	1176.5
	C	680	358	462.5
	D	310	525	365
	E	1440	970	760
	E1	310		
	F	1500	1110	840
	G	306	296	150
	I	80	80	40
	K	186	186	75
	L	116	96	32
	M	186	200	110
	O	506	495	328.5
	P3	1700	1070	1122
	R	805	420	498
	r			400
	s	39	34	39
	T	276	276	132
	V	620	288	425.5
	Y	30	27	27
Centering range with chip guard	**U1**	**600**	**100**	**150**
	U2	**1050**	**520**	**400**
Cylinder bore.	d	200	200	100
	d1	200	80	80
Max.Load caring capacity	daN	30,000	12,000	4000
Cylinder support of bottom arm	daN	20,000	7,000	1500
Min/Max.Pressure for bottom arm cylinder	daN	25/80	20/75	15/40
Hyd. Connection.(BSP)	h	1/2"	1/2"	3/8"
Operating pressure.(Min/Max)	bar	15/80	10/60.	08/115
Max. Clamp force /roller.	daN	8300	6500	8300
Clamp. Press./Roller at 15 bar	daN	1200	1200	500
Centering accuracy over the whole clamping range.	mm	0.08	0.06	0.04
Repeatability	mm	0.01	0.01	0.01
Max.peripheral roller speed.	m/min	200	200	550
Weight Approx.	kg	3000	2200	750

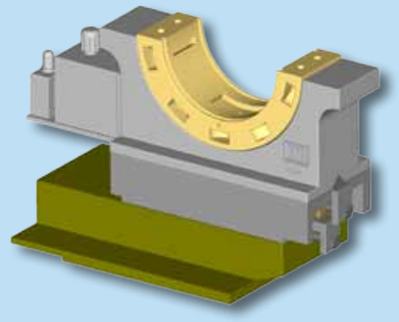

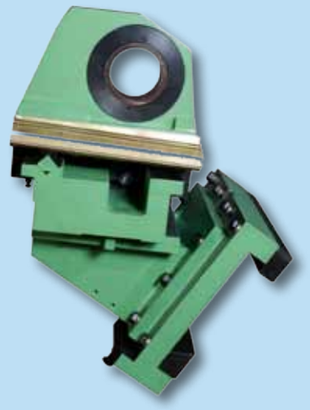

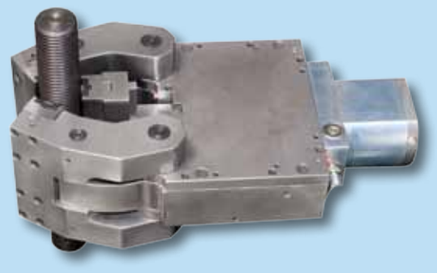

Hydro static steady rest:

Hydrostatic steady rests used on very large machines to support very heavy components during turning, milling, drilling etc.

- Diameter range -150mm to 600mm.
- Component weight- 10 tonnes to 90 tonnes.
- Complete package including steady rest, hydraulic power pack.

Ring Steady rest:

Which is used for machining of shells, and cone shaped components where standard steady rests are not sufficient.

These kind of steady rests are mainly used in defense sectors, ordnance factories.

- Clamping diameter range - 85 mm to 90mm.
- Other clamping diameters available on request.
- Complete package available, including steady rest, power pack, electrical etc.

THM series of steady rests:

These steadies mainly used in screw cutting machines. It can be used in Milling and turning centers.

- Clamping range -40mm to 160mm.
- Other clamping diameters available on request.
- Complete package available, including steady rest, mounting bracket,electrical etc.

Other Special Models:

- Engine valve stem welding by Friction welding.
- Indution hardening of shaftr, gears etc.
- Cam shaft groove machining.

Steady Rests - Grinding Steadies

Steady Rests for Cylindrical grinding

FAR has developed an entire range of pad type self catering steady rests for cylindrical grinding machines. FAR has also provided several custom made solutions to suit customers in process gauging components and machines.

Salient features

- 3 point steady rest with carbide pad support
- Greater accuracy for todays tolerance limit
- Models for crank shaft, and cam shaft
- Less down time for steady rest adjustment
- The follow - down operation allows all supporting pads to moves toward center as the part size diminishes. This feature provide continuous support while the part is being ground
- Pass through grinding
- Easy retro fitting in ordinary cylindrical grinders
- Actuation from simple hydraulic power pack of machine using manual/PLC solenoid operated DC valve
- More parts per hour
- Increase grinding wheel life
- Custom models to meet your exact application
- Vertical loading by gantry for special models

Pass through grinding possible on complete diameter range

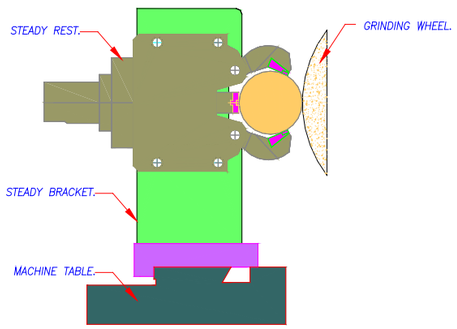

Steady Sliding Arrangement

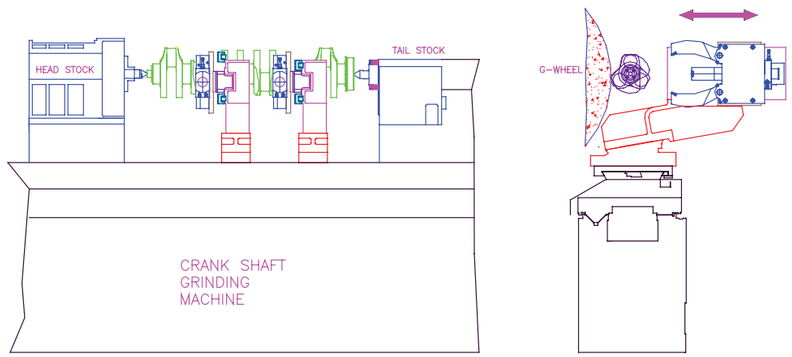

Steady with Job Sliding Arrangement

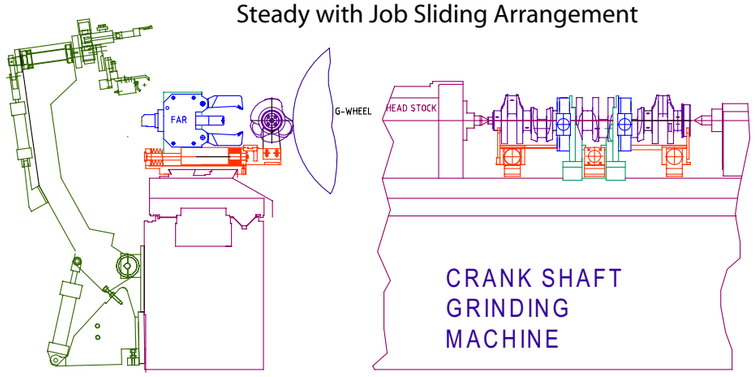

Steady rest for standard grinding application

Model: GHS

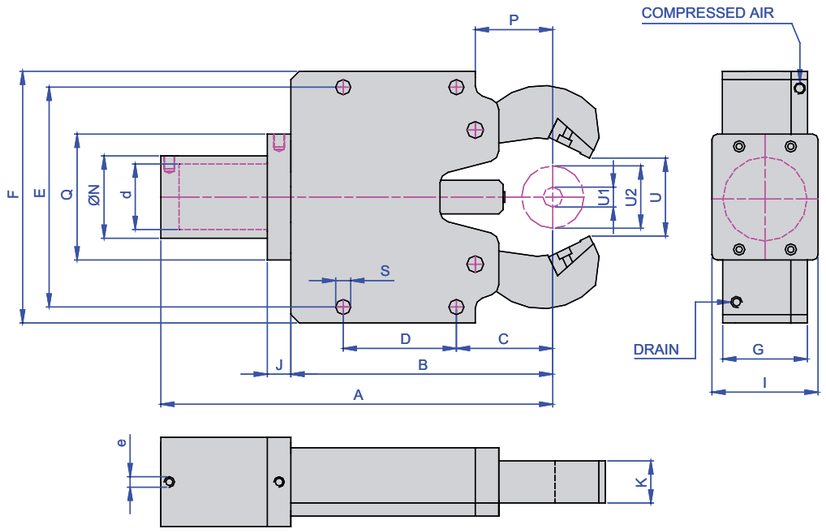

GHS Series

This series is for all standard grinding applications such as cylindrical grinding, camshaft grinding, camlobe grinding etc., We also manufacture custom design to accommodate in-process gauge.

Steady rest for crank shaft grinding application

Model: KRGU

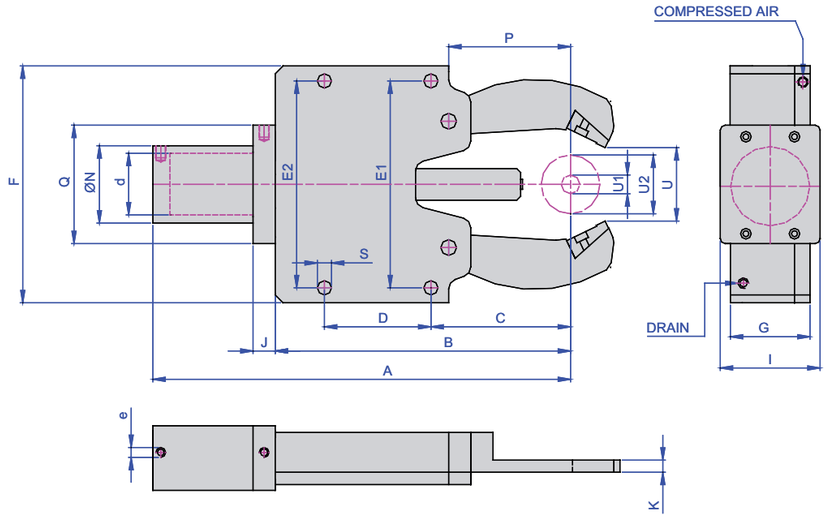

KRGU Series

This series is specially designed for crank shaft grinding to accommodate the maximum eccentric throw and journal diameter of crank shafts. Custom made design are available to accommodate in-process gauge and vertical loading.

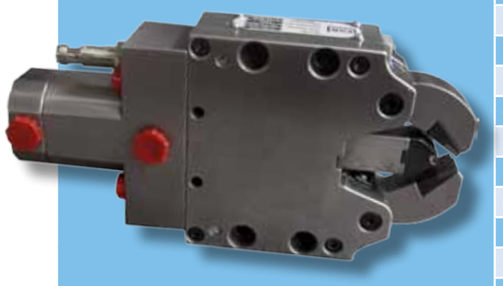

Steady Rest Type		GHS 260E	GHS260H	GHS 1012A
	A	246	241.6	463
	B	147	146.5	312
	C	56	38	115
	D	65	65	135
	E	128	128	262
	F	146	146	300
	G	44	44	85
	I	44	44	85
	J	23	23	25
	K	20	20	45
	N	44	42	65
	P	38	56	87
	Q	96	96	110
	S	M12x1.75P	12	18
Clamping Ranges	**U1**	**20**	**14**	**10**
	U2	**60**	**50**	**120**
Max. axial Opening	U	62	48	122
Cylinder bore.	d	30	30	80
Hyd. Connection. (BSP)	e	¼"	1/4"	¼"
Standard Operating Pressure	bar	1-10	2--10	2-15
Max. Operating pressure	bar	15	15	20
Clamp. Press./Pad at 6 bar	daN	25	25	100
Max. clamp pressure/Pad.	daN	100	100	1000
Centering accuracy over the whole clamping range.	mm	0.008	0.005	0.01
Repeatability	mm	0.003	0.002	0.003
Weight Approx.	kg	7	7	42

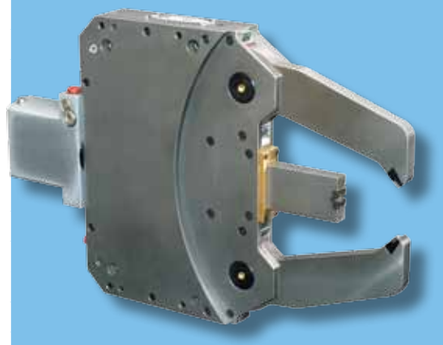

Steady Rest Type		KRGHS 790.	KRGU1517	KRGHS 9580	KRGU4510	KRGHS9585
	A	420	518.5	565	516.5	591
	B	323	423	444	408	444
	C	190	230	254	215	254
	D	90	135	142	135	142
	E1	202	262	350	262	350
	E2	202	262	320	262	350
	F	234	290	400	290	400
	G	55	64	64	62	64
	I	62	68	73	68	72
	J	25	33	26	33	25
	K	10	16	17/35*	24	21
	N	53	105	107	119	95
	P	150	206.4	186	185	186
	Q	95	141	107	148	130
	S	M12X1.75	14	18	14	18
Clamping Ranges	**U1**	**70**	**150**	**95**	**45**	**95**
	U2	**90**	**170**	**185**	**105**	**185**
Max. axial Opening	U	98	181	195	125	210
Eccentric throw (R value)	R	120	175	170/285*	125	285
Cylinder bore.	d	40	50	60	50	60
Hyd. Connection. (BSP)	e	¼"	¼"	¼"	¼"	¼"
Standard Operating Pressure	bar	1-10	6--30	5-18	6--30	12--45
Max. Operating pressure	bar	15	35	20	35	60
Clamp. Press./Pad at 6 bar	daN	25	180	56	180	56
Max. clamp pressure/Pad.	daN	60	196	180	196	425
Centering accuracy over the whole clamping range.	mm	0.004	0.01	0.010	0.01	0.01
Repeatability	mm	0.005	0.004	0.005	0.004	0.004
Weight Approx.	kg	20	55	60	50	65

Steady rest for grinding application with vertical loading

Model: VGHS

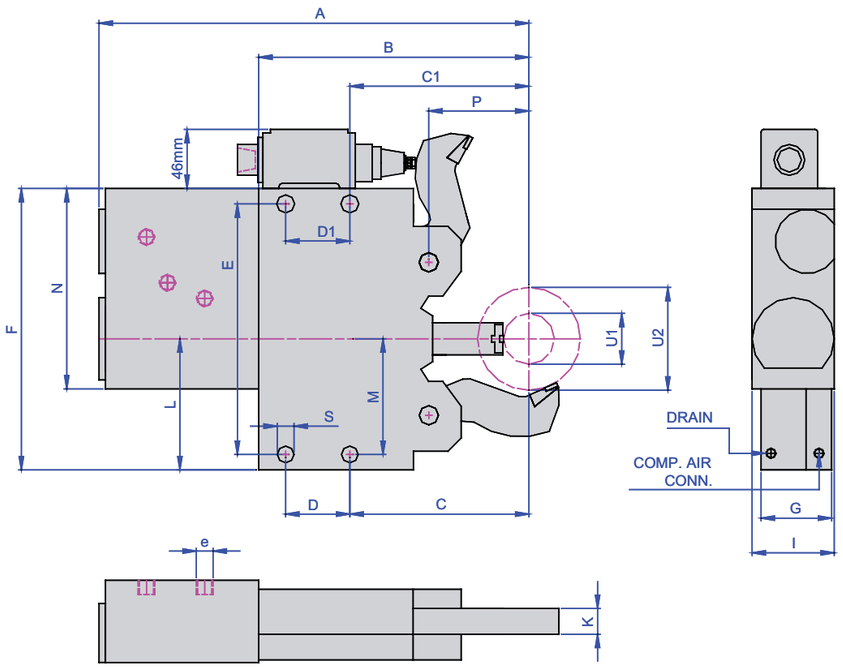

VGHS Series

These steadies are for cylindrical and camshaft grinding. This series is designed to be used on machines where GHS series steadies cannot be used. It comes with a top arm which is fully openable so as to load components to the machine centre. The opening action can be identified through a sensor integrated to the steady itself.

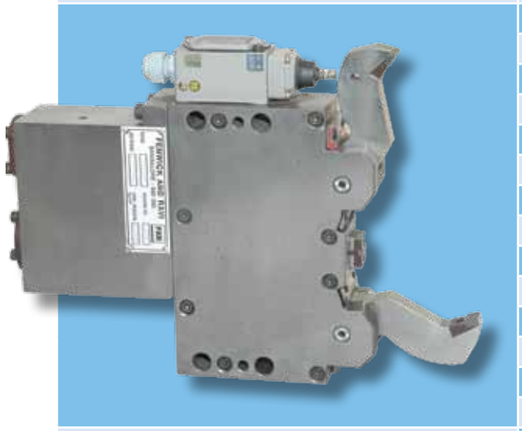

STEADY REST TYPE.		VGHS 260.	VGHS 480
	A	335	335
	B	210	210
	C	139.5	139.5
	D	50	50
	E	195	195
	F	214	214
	G	55	55
	I	60	60
	K	20	20
	L	102	102
	M	90	90
	N	156	156
	P	78	78
	S	Ø13	Ø13
Centering Ranges	**U1**	**20**	**40**
	U2	**60**	**80**
Cylinder bore.	d	40	40
Hyd. Connection. (BSP)	e	¼"	¼"
Standard Operating Pressure	bar	3-15	3-15
Max. Operating pressure	bar	20	20
Clamp. Press./Pad at 6 bar	daN	25	25
Max. clamp pressure/Pad.	daN	100	100
Centering accuracy over the whole clamping range.	mm	0.005	0.005
Repeatability	mm	0.002	0.002
Weight Approx.	kg	17	17

Notes

Barfeeders

Barfeeders

FAR has been in the fore front of manufacturing barfeeders for many years. Barfeeders have become the best automation devices. These devices can add hours of untended operating time for part volumes of a few hundred to tens of thousands.

FAR manufacture four different types of barfeeder namely:

- Quick Feed
- Master Feed
- Super Feed
- Auto Feed

The QF short barfeeders have become industry standard and are known for their rugged build and reliable operation. These are manufactured in hydraulic, pneumatic, and servo variants. FAR has launched the QF swing all electric barfeeder which is easy to setup and operate. This is a very economically priced model.

The Master Feed is a hydrodynamic magazine type 3 meter barfeeder. The Super Feed is a hydrodynamic multi tube indexing 3 meter barfeeder while the Auto Feed has the same specification but is only a single tube feeder.

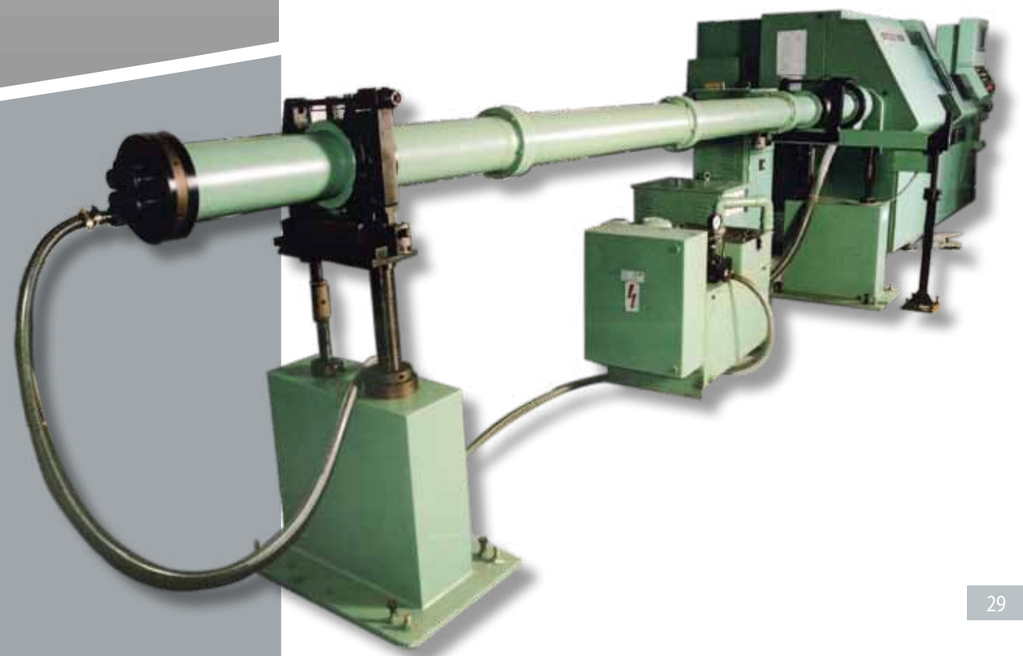

New

Model: QF 12/15 Servo

All electric

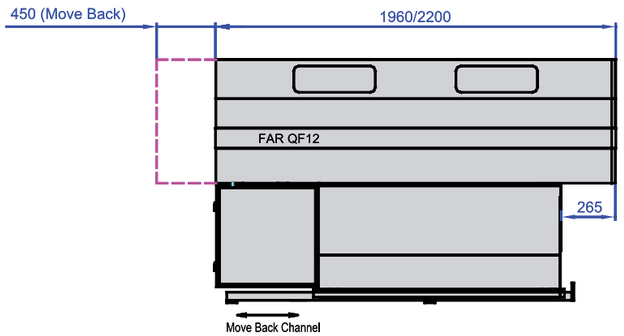

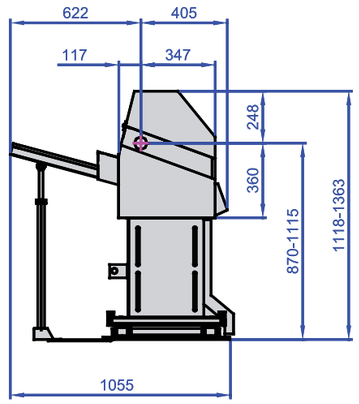

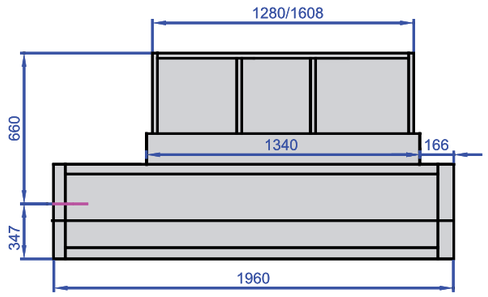

*** Fully electric version.**
*** Easy to setup**
*** High productivity - can be used without turret stopper**
*** Economically priced**

Models	QF-Servo 12/15 Servo
Bar diameter	6 - 75 mm
Bar length (Depends on spindle length of CNC)	1200/1500 mm
Center Height	870 - 1115
Capacity of material rack	Ø 10 mm - 60 nos
Spindle speed	no restriction
Guiding	Through reduction tube inside the spindle
Feeding	By Servo Motor
Positional Accuracy	0.5 mm
Straightness of bar	No restrictions
Bar preparation	Chamfering not required, a deburring is enough
Reloading time for fresh bar	20 seconds
Weight	550 kg
Power supply	415 V, three phase, 50 HZ
Control	Electronic programmable controller
Foundation bolt	M 12 x 125 expansion bolt
Move back channel	450 mm
Programming feature	Standard
Positioning Method	By servo through program / turret stopper

Model: QF 12/15 Hydraulic or Pneumatic

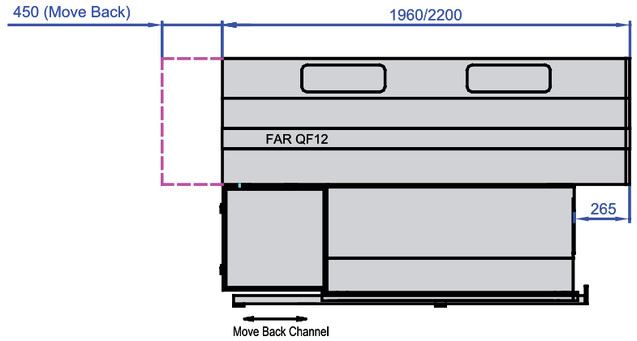

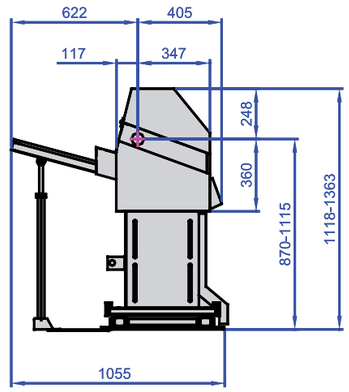

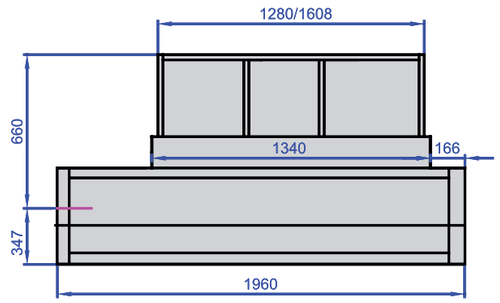

Short Bar [1.2/1.5m] High speed Bar feeders. Compact Design / Low floor space. 95% machine up time. No Bar end preparation. No restriction on speed. Bar diameter range (6-65mm). Bar profile - Round, Hexagon Tube , Square operation

Models	QF 12/15 Hydraulic / Pneumatic
Bar diameter	6 - 65* mm
Bar length (Depends on spindle length of CNC)	1200/1500 mm
Center Height	950 - 1300 mm
Capacity of material rack	6 mm - 165 nos
Spindle speed	no restriction
Guiding	Through reduction tube inside the spindle
Feeding	By hydraulic / Pneumatic pusher
Positional Accuracy	
Straightness of bar	No restrictions
Bar preparation	Chamfering not required, a deburring is enough
Reloading time for fresh bar	25 seconds
Weight	400 kg
Power supply	415 V, Three phase, 50 HZ / 230 V, Single phase, 50 HZ
Control	Electronic Controller
Foundation bolt	M 12 x 125 expansion bolt
Move back channel	450 mm
Programming feature	Optional

* Also available bar range - 5 to 80 mm

Master Feed Series - Hydrodynamic Magazine Type
3 Meter Bar Feeder S

Model: MF Fixed Head

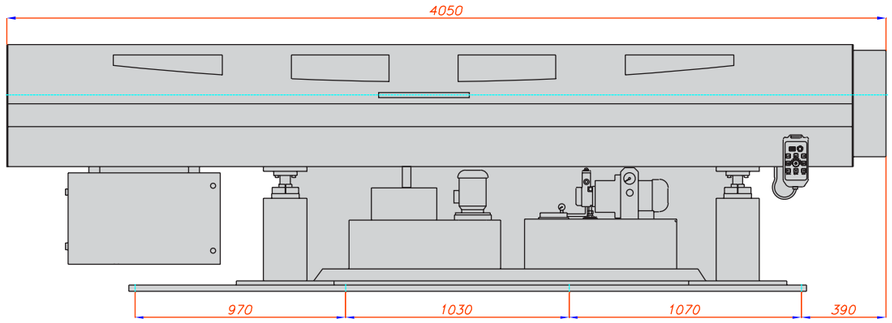

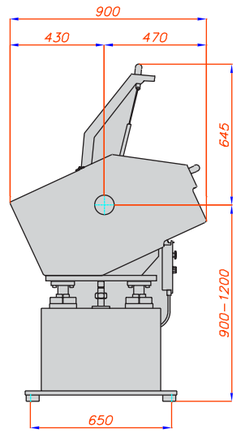

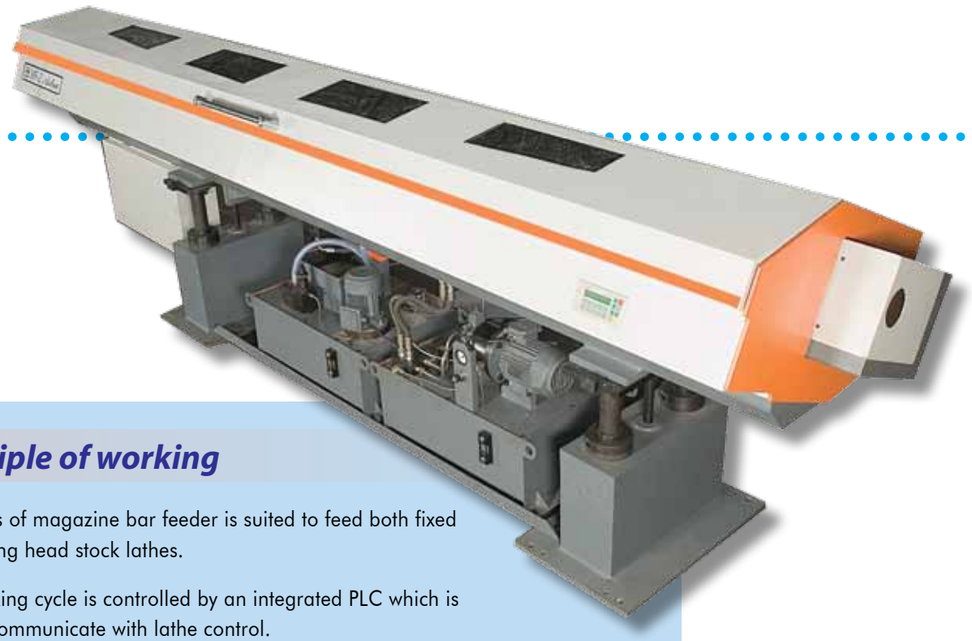

Salient features

- Most modern feeding mechanism
- Very compact design
- Models are available to cover bar ranges 2mm to 80mm
- Bar length 3200mm
- Can be interfaced to all CNC machines
- Specially designed for CNC lathes and sliding head (swiss type) auto mats
- Programmable lengths
- Easy to change bar ranges
- Very high speeds of spindle rotation possible
- Hydrodynamic support of bars possible
- Other models available on request
- Models available with both front and rear ejection

Principle of working

MF series of magazine bar feeder is suited to feed both fixed and sliding head stock lathes.

The working cycle is controlled by an integrated PLC which is able to communicate with lathe control.

The display unit makes programming easier. A pendant is provided to control the main functions without leaving the lathe.

During machining, the guide channel is closed and a pump is provided to maintain a continuous oil flow inside the rubber liner, developing a hydrodynamic effect. This helps the bar inside the rubber liner to rotate at a high rpm without any vibration and surface damage.

The front clamp is attached for an extra support to the bar pusher while machining cycle.

The bar end piece ejection can be done by center clamp or by next bar feeding.

Stroke Control And Safety Valve

Specifications

Description	MF1	MF2	MF3
Bar dia. Range	2 – 22	10-38	12-80
Bar length (max)	3200	3200	3200
Bar magazine capacity	320mm	320mm	380mm
Feeding speed	650mm/sec.	600mm/sec.	600mm/sec.
Center height	950-1200mm	950-1200mm	950-1200mm
Bar support	Hydrodynamic in barfeeder and reduction tube inside the lathe spindle	Hydrodynamic in barfeeder and reduction tube inside the lathe spindle	Hydrodynamic in barfeeder and reduction tube inside the lathe spindle
Feeding	Hydraulic / Servo Motor	Hydraulic / Servo Motor	Hydraulic / Servo Motor
Bar straightness & preparation	0.5mm/1000mm Deburr, chamfering & end machining	0.5mm/1000mm Deburr, chamfering & end machining	0.5mm/1000mm Deburr, chamfering & end machining
Reloading time of fresh bar	20 sec..	25 sec..	30 sec..
Power supply voltage	415v 50hz 3phase	415v 50hz 3phase	415v 50hz 3phase
Power consumption	1.5kW	1.5kW	2kW
Weight of unit with out oil	750 kg	800kg	1100kg
Lubricating oil quality	60ltrs	70ltrs	80ltrs

Model: SF

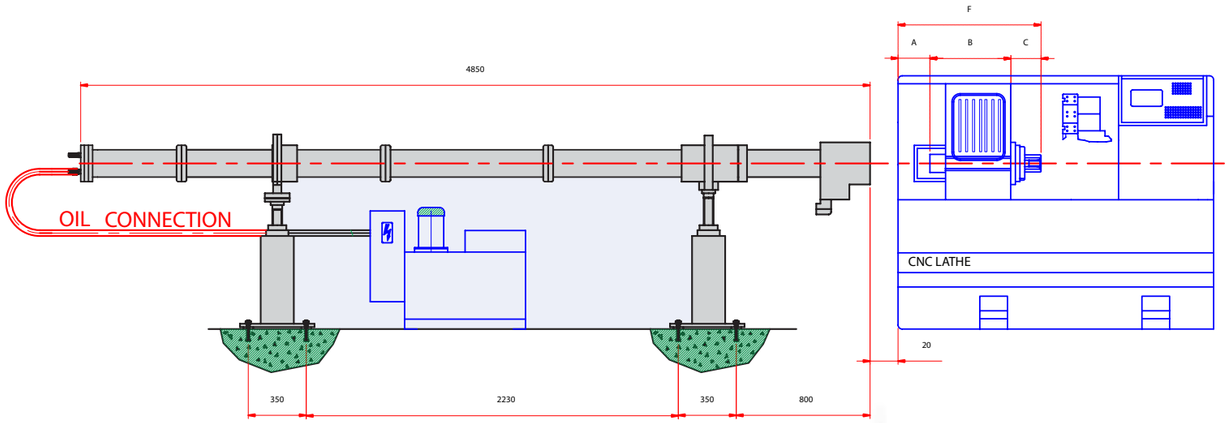

Salient features

- FAR SUPERFEED can be attached to any kind of turning machines with out making any modification to the machine. It is specially suited for high speed turning machines.
- No removal of guide tubes to accommodate the whole clamping range only manual indexing is sufficient
- Unattended bar machining possible by interfacing to the CNC system of the machine
- Round , hexagon, square and other profile can be fed
- Ground guide way facilitates free lateral and longitudinal movement
- FAR can supply any range according to the customer requirement

Model No.	Bar Range in mm
FAR SUPERFEED 22	10 to 22
FAR SUPERFEED 36	10 to 36
FAR SUPERFEED 44	10 to 44
FAR SUPERFEED 54	15 to 54
FAR SUPERFEED 65	20 to 65
FAR SUPERFEED 80	35 to 84

Specifications :

- Length of Bars: Standard models 3metres / 4metres (other length optional)
- Rotation speed: Rotational speed up to 4000rpm
- Hydraulics: Self contained hydraulic unit with high filtration capacity, tank capacity-100 liter, valves, pressure gauge
- Electrical equipment: Fully protected control and power circuits 440v,3phase, 50hz, .75 hp
- Weight: 700kg(approx)

Model: AF

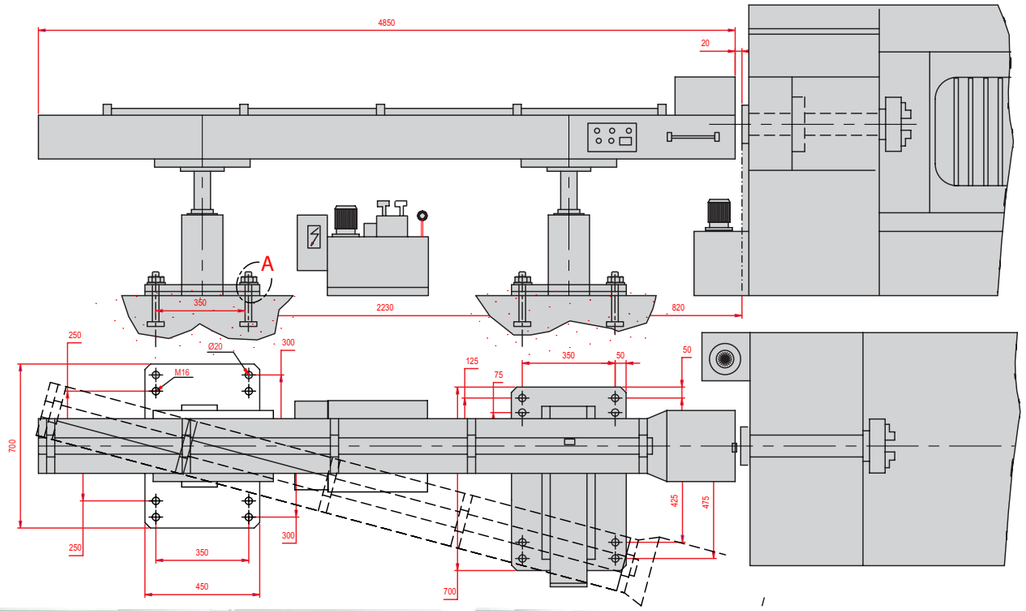

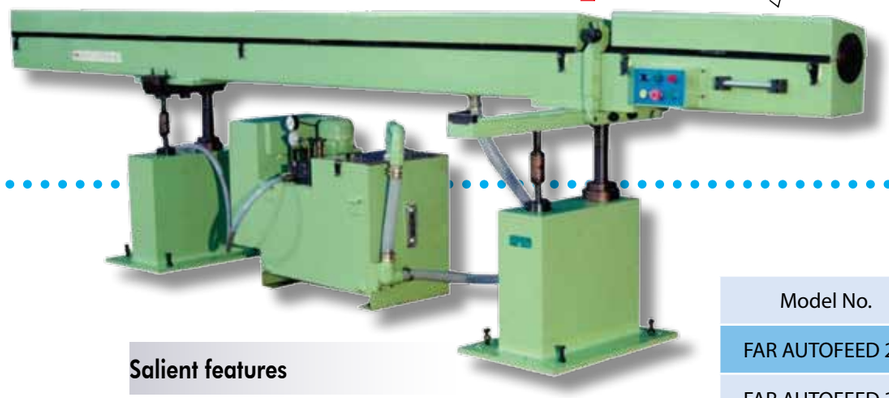

Salient features

- FAR AUTOFEED can be attached to any kind of turning machines with out making any modification to the machine. It is specially suited for high speed turning machines. Unattended bar machining possible by interfacing to the CNC system of the machine.
- Retractable half moon segment eliminate decentralization and ovalization .This increases the speed of rotation.
- Guide tube can be changed within 3 minutes thus saving precious time.
- Round, hexagon, square and other profile can be fed
- Ground guide way facilitates free lateral and longitudinal movement.
- FAR AUTO FEED offers unique flexibility that, guiding tubes can be required as per requirement at any time.
- FAR AUTO FEED has been tested by Central machine tool institute (CMTI) Bangalore India.

Model No.	Bar Range in mm
FAR AUTOFEED 22	10 to 22
FAR AUTOFEED 36	10 to 36
FAR AUTOFEED 44	10 to 44
FAR AUTOFEED 54	10 to 54
FAR AUTOFEED 65	10 to 65
FAR AUTOFEED 80	10 to 84

Specifications :

- Length of Bars: Standard models 3metres / 4metres (other length optional)
- Rotation speed: Rotational speed up to 4000rpm
- Hydraulics: Self contained hydraulic unit with high filtration capacity, tank capacity-100 liter, valves, pressure gauge
- Electrical equipment: Fully protected control and power circuits 440v,3phase, 50hz, .75 hp
- Weight: 600kg(approx)

FAR PRODUCTS - at work

Large Steady Rest on Slant Bed Lathe - China

Steady Rest with Pneumatic Cylinder on Flat bed lathe, Travelling application - USA

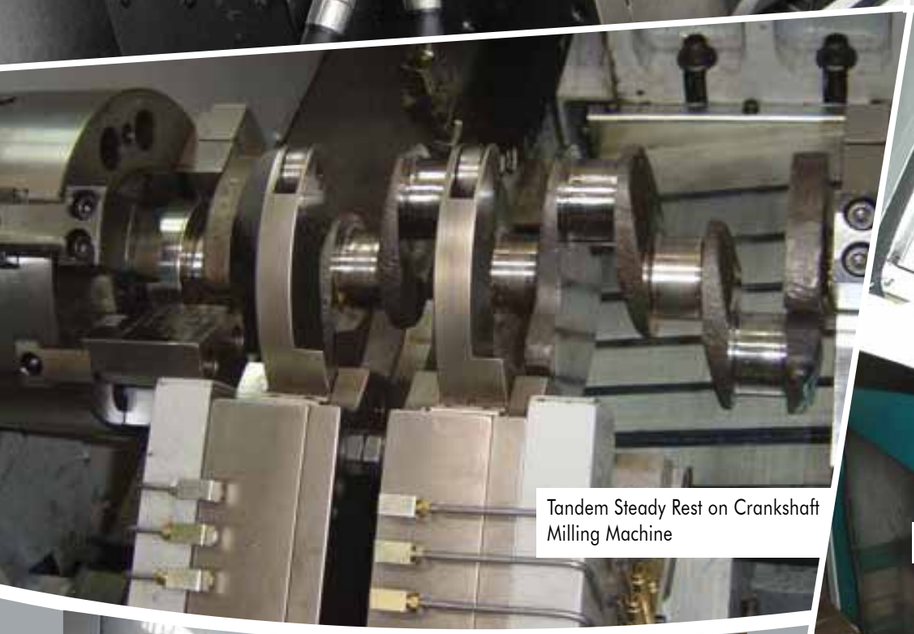

Tandem Steady Rest on Crankshaft Milling Machine

End boring on Slant Bed lathe

Steady rests on Various machines.

FAR Steady Rest are installed all over the world on different machines.

Deep Hole End Boring Operation - Italy

Hydraulic Cylinder Rod Machining - Canada

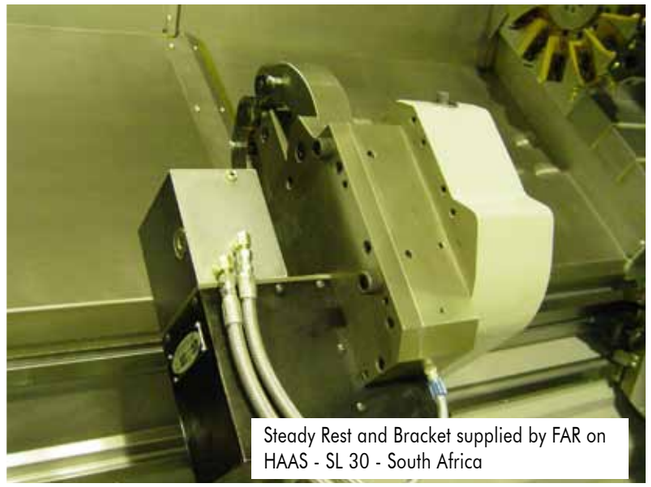

Steady Rest and Bracket supplied by FAR on HAAS - SL 30 - South Africa

FAR Products - at work

Crank Shaft Web Milling - USA

FAR Steady rests and Barfeeders are also installed in many countries world over.

Steady Rest on HAAS - USA

Steady Rests for Special Application

Heavy Duty Steady Rests

Steady Rest on Leadwell

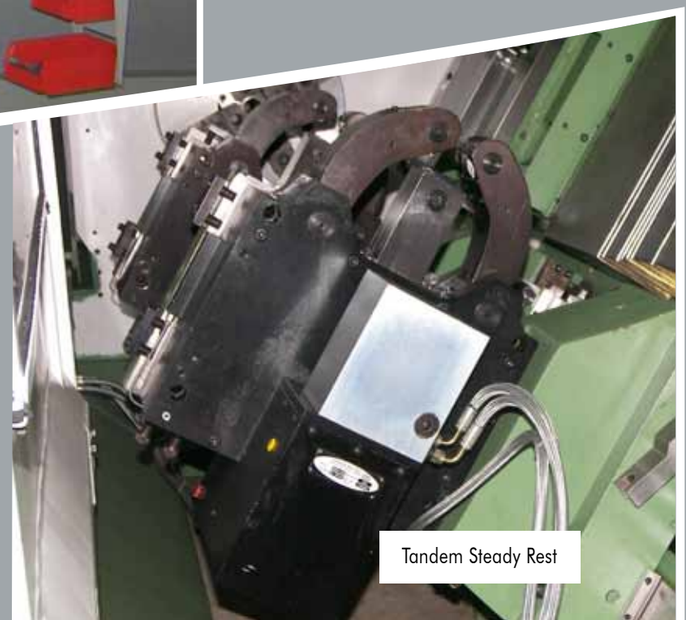

Tandem Steady Rest

Crank Shaft Steady Rests with coolant flush

USA CANADA BRAZIL SPAIN FRANCE ITALY GERMANY

TURKEY UAE SAUDI ARABIA CHINA THAILAND NETHERLANDS AUSTRALIA

SOUTH KOREA POLAND PORTUGAL RUSSIA SOUTH AFRICA

Authorised Dealer

FAR

FENWICK AND RAVI

#10/3, Lakshmipura Main Road, (Off. Jalahalli West), Abbigere, Chikkabanavara Post, Bangalore – 560 090. Karnataka, INDIA.

Phone: +91 80 2838 8589 / 2345 3949 / 2345 3835

Tele Fax: +91 80 2838 9441

E-Mail: fenwickandravi@vsnl.net / farexports@gmail.com

Web: www. far.co.in

www. fenwickandravi.com